MATRICE 600 PRO

User Manual

V1.0 2017.10

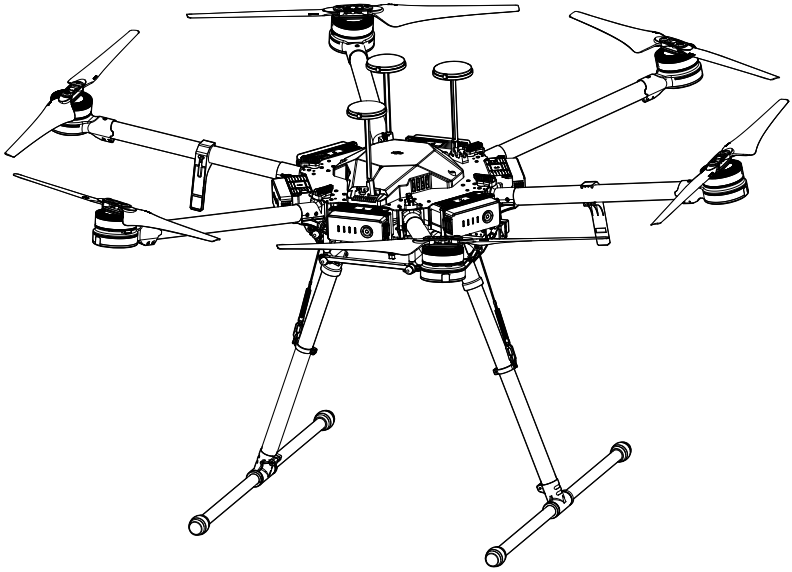

Searching for Keywords

Search for keywords such as “battery” and “install” to find a topic. If you are using Adobe Acrobat Reader to read this document, press Ctrl+F on Windows or Command+F on Mac to begin a search.

Navigating to a Topic

View a complete list of topics in the table of contents. Click on a topic to navigate to that section.

Printing this Document

This document supports high resolution printing.

Using This Manual

Legends

Warning Important Hints and Tips Reference

Information

The MATRICE™ 600 Pro does not include a gimbal or camera. A corresponding gimbal or camera is required for certain functions mentioned in this manual.

Before Flight

The following tutorials and manuals have been produced to help you get the most out of your Matrice 600 Pro.

1. In the Box
2. Disclaimer and Safety Guidelines
3. Quick Start Guide
4. Intelligent Flight Battery Safety Guidelines
5. User Manual

Check to see that you have all of the components listed in the In the Box document. Before assembly, read the Disclaimer and Safety Guidelines. Then prepare for your first flight by using the Quick Start Guide. For more information, please refer to the User Manual available on the DJI website (http://www.dji.com).

Download DJI Assistant 2

When using your Matrice 600 Pro for the first time, you will need to activate it in the DJI Assistant 2 software.

http://www.dji.com/matrice600-pro/info#downloads

DJI ASSISTANT™ 2 supports Windows 7 (or later) or OS X 10.11 (or later).

Download DJI GO App

Be sure to use the DJI GO™ app or other apps compatible with DJI aircraft during flight. Scan the QR code or visit http://m.dji.net/djigo to download the DJI GO app.

DJI GO supports iOS 8.0 (or later) or Android 4.2 (or later).

© 2017 DJI All Rights Reserved.

Warning

The rotating propellers can cause serious damage and injury. Fly with caution at all times.

Assembly Warning

1. Ensure that all other parts are installed before inserting the Intelligent Flight Batteries.
2. DO NOT remove any glued-in screws.
3. The Matrice 600 Pro should be lifted off the ground when testing the landing gear or recalibrating servo travel.

Flight Warning

1. The aircraft is not waterproof. DO NOT fly in rainy or snowy weather.
2. Ensure that all parts are in good condition before each flight. DO NOT fly with worn or damaged parts.
3. Ensure that the propellers and motors are installed correctly and propellers and frame arms are unfolded before each flight.
4. Ensure that all the GPS-compass Pro are unfolded and the arrows on the GPS-Compass Pro point toward the front of the aircraft before each flight.
5. Ensure that all cables are connected correctly and firmly before each flight.
6. Maintain a safe distance from people, buildings, high voltage power lines, tall trees, water, and other hazards when flying the aircraft.
7. Only use DJI TB47S/TB48S Intelligent Flight Batteries as the power supply.
8. DO NOT overload the system.
9. DO NOT go near or touch the motors or propellers when they are spinning, as this can cause serious injury.
10. Disconnect the batteries and remove the camera during transportation to avoid damage or injury.
11. Only use compatible DJI parts.

If you encounter any problems or if you have any questions, please contact your local DJI authorized dealer or DJI Support.

DJI Support Website:
www.dji.com/support

 © 2017 DJI All Rights Reserved.

Contents

Using This Manual 1
Warning 2
Product Profile 5
Introduction 5
Highlighted Features 5
Installation 6
Mounting the Landing Gear 6
Unfolding the Aircraft 6
Mounting the Gimbal (Optional) 7
Intelligent Flight Battery 8
Profile 8
Intelligent Flight Battery Functions 8
Using the Batteries 9
Remote Controller 14
Profile 14
Preparing Remote Controller 14
Remote Controller Overview 14
Remote Controller Operations 16
Dual Remote Controllers Mode 21
Remote Controller LEDs 23
Linking the Remote Controller 24
Return-to-Home (RTH) 26
Profile 26
Smart RTH 26
Low Battery RTH 26
Failsafe RTH 27
RTH Safety Notices 28
Updating the Home Point 28
A3 Pro Redundancy System 29
Mounting Positions 29
System Status 29
DJI Assistant 2 30
Installation and Launching 30
Using the DJI Assistant 2 30

© 2017 DJI All Rights Reserved.

DJI GO App 32
Equipment 32
Editor 35
Skypixel 35
Me 35
Flight 36
Flight Environment 36
Flight Limits and No Fly Zones 36
Pre-Flight Checklist 39
Flight Status Indicators 40
Calibrating the Compass 41
Auto Takeoff and Auto Landing 42
Starting and Stopping the Motors 42
Stopping the Motors Mid-flight 43
Flight Test 43
Appendix 44
Specifications 44
Intelligent Flight Modes 47
Upgrading the Firmware 48
Retractable Landing Gear 49
Reserved Mounting Position Dimensions 51
A3 Pro Flight Control System Overview 52
Lightbridge 2 Air System Overview 54
DJI Gimbal Connection Illustrator 55
DJI Zenmuse X3 Gimbal and Camera 57

 © 2017 DJI All Rights Reserved.

Product Profile

Introduction

The Matrice 600 Pro is a six-rotor flying platform designed for professional aerial photography and industrial applications. It is equipped with a dedicated DJI™ A3 Pro triple-modular redundancy system and advanced intelligent flight functions, ensuring safe and stable operation at all times. Its mechanical design, with quick-release landing gear and mounted folding arms, make it easy to transport, store, and prepare for flight. With a maximum takeoff weight of 15.5 kg, the Matrice 600 Pro can meet specific needs across a range of industries.

Highlighted Features

The A3 Pro's three GPS modules and IMUs add triple modular redundancy to greatly reduce the risk of system failure. It is fully compatible with the DJI Onboard and Mobile SDKs, allowing developers to optimize the flying platform for specific applications.

The Matrice 600 Pro uses six Intelligent Flight Batteries and a patented battery management system to extend flight time and provide safe and reliable power supply. The standard DJI Hex Charger can charge up to six Intelligent Flight Batteries and two remote controllers simultaneously.

The Matrice 600 Pro is compatible with the DJI ZENMUSE™ Z30, X3, X5 series, XT gimbal and camera, Zenmuse Z15 series HD gimbal, and Ronin-MX gimbal for professional aerial photography and industrial applications.

The retractable landing gear included with the Matrice 600 Pro allows for clear, 360-degree camera views.

The LIGHTBRIDGE™ 2 HD video downlink is integrated into the remote controller, allowing real-time camera footage to be displayed in the DJI GO app. Dual remote controller mode makes it possible for the aircraft and camera to be operated on two separate controls.

© 2017 DJI All Rights Reserved.

Installation

Mounting the Landing Gear

1. Ensure the screw on the landing gear leg is pointing in the same direction as the gap next to the knob on the landing skid. Insert both landing gear legs into a corresponding landing skid, rotate the landing gear leg until it is fully seated into the landing skid, and then secure it in place by tightening the knob.
2. Ensure the hook on the landing gear leg is facing toward the outside of the aircraft, then attach it to the connector on the aircraft body. Rotate the landing gear leg until it is fully seated into the connector.
3. Connect both springs to the center frame and the landing gear legs. Mind your fingers when mounting the springs.

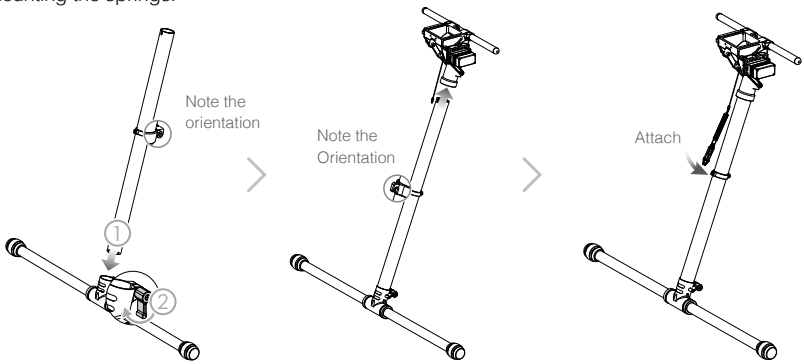

Unfolding the Aircraft

1. Gently lift the frame arm. Twist the red knob to lock each arm in place. To store, untwist the knob and lower the frame arm.
2. Unfold the propellers.
3. Unfold the GPS-Compass Pro and ensure that all the arrows on the GPS-Compass Pro point toward the front of the aircraft.

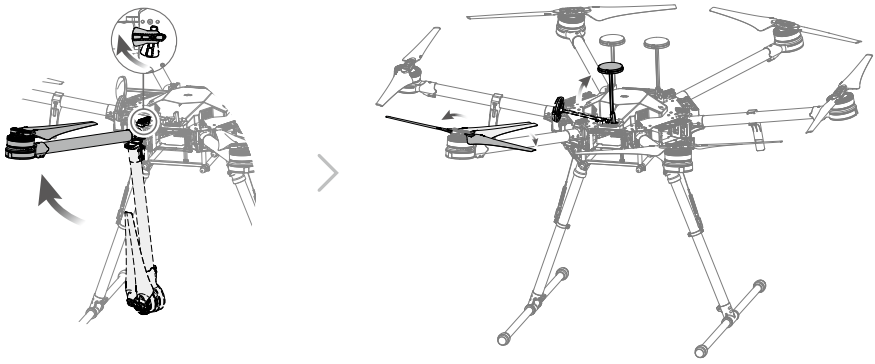

⚠ For storage, remove the landing gears, lower the retractable modules, then lower the frame arms to prevent damage.

 © 2017 DJI All Rights Reserved.

Mounting the Gimbal (Optional)

The built-in flight control system of the Matrice 600 Pro is compatible with the following DJI gimbals and cameras.
Ronin-MX
Zenmuse Z30
Zenmuse X3
Zenmuse X5 Series
Zenmuse XT
Zenmuse Z15 Series HD Gimbal: Z15-A7, Z15-BMPCC, Z15-5D III, Z15-GH4

Different accessories are used to mount different gimbals or cameras. Purchase corresponding accessories according to your needs. Refer to DJI Zenmuse X3 Gimbal and Camera (p. 57) for gimbal movement control for all the gimbals above.

© 2017 DJI All Rights Reserved.

Intelligent Flight Battery

Profile

The Matrice 600 Pro has six battery compartments and six Intelligent Flight Batteries to extend the flight time. The standard Intelligent Flight Battery has a capacity of 4500mAh, voltage of 22.2V, and built-in smart charge-discharge function. It can only be charged with an appropriate DJI approved charger.

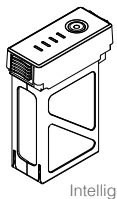

Intelligent Flight Battery

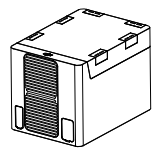

DJI Hex Charger

⚠ The Intelligent Flight Battery must be fully charged before first-time use.

Intelligent Flight Battery Functions

1. Battery Level Display: LEDs display the current battery level.
2. Battery Life Display: LEDs display the current battery life.
3. Auto-discharging Function: The battery automatically discharges to below 65% of total power when it is left idle (pressing the power button will cause the battery to exit idle state) for more than 10 days to prevent swelling. It takes about two days to discharge the battery from 100% to 65%, and it is normal to feel moderate heat emitting from the battery during the discharge process. The discharge thresholds can be adjusted in the DJI GO app.
4. Balanced Charging: Automatically balances the voltage of each battery cell when charging.
5. Overcharge Protection: Automatically stops charging the battery when it is fully charged.
6. Temperature Detection: The battery will only charge when its temperature is between 5°C (41°F) and 40°C (104°F).
7. Overcurrent Protection: The battery stops charging when the maximum current of 10A is exceeded.
8. Over-Discharge Protection: The battery stops discharging when the battery voltage reaches 18V to prevent damage from over-discharge.
9. Short Circuit Protection: Automatically cuts the power supply when a short circuit is detected.
10. Battery Cell Damage Detection: The DJI GO app shows a warning message if a damaged battery cell is detected.
11. Battery Log: Show the last 32 entries of battery information including the warning messages.
12. Sleep Mode: The battery enters sleep mode after 10 minutes of inactivity to save power.
13. Communication: The battery voltage, capacity, current, and other relevant information is sent to the flight controller.

⚠ Read the *Disclaimer and Safety Guidelines* and *Intelligent Flight Battery Safety Guidelines* before use. Users take full responsibility for all operations and usage.

 © 2017 DJI All Rights Reserved.

Using the Batteries

Installing the Batteries

- There are six battery compartments on the Matrice 600 Pro. You must load all six battery compartments with batteries of the same model before each flight.
- Make sure all the batteries are fully charged before each flight.
- Never insert the Intelligent Flight Battery into or remove it from the battery compartment of the Matrice 600 Pro when it is powered on.

- If using more than six batteries, you can mark them separately (six batteries for one set) with the battery stickers that come with the Matrice 600 Pro.

Insert the six Intelligent Flight Batteries into the battery compartments.

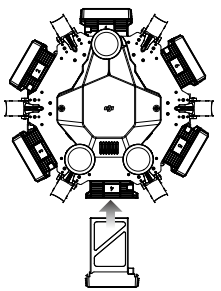

Powering ON/OFF

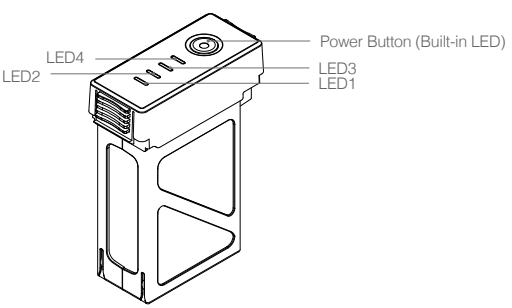

Powering On: Press the Power Button once, then press again and hold for 2 seconds to power on. The Power LED will turn red and the Battery Level Indicators will display the current battery level.

The Matrice 600 Pro has six Intelligent Flight Batteries and an advanced battery management system. When you power on one of the batteries, the battery management system will automatically assess the power level for all of the other batteries. If the power supply is OK, the other batteries will power on automatically. Likewise, you only need to power off one battery and all the other batteries will power off automatically.

DO NOT manually power on more than one Intelligent Flight Battery to avoid damaging the batteries.

© 2017 DJI All Rights Reserved.

If the power supply is not OK when powering on the batteries, the DJI GO app will either prompt you to adjust the battery positions or tell you there is a large voltage difference.

To adjust the battery positions:
1. Power off all the batteries.
2. Adjust battery positions by following the tips in the DJI GO app.
3. Ensure all the battery positions are correct and then power on one of the batteries. The other batteries will power on automatically if the positions are correct.

If the message prompt says there is a large voltage difference, the power supply issue cannot be resolved by adjusting the battery positions. Fully charge all the batteries and try again.

Powering Off: Press the Power Button once, then press again and hold for 2 seconds to power off.

⚠ Ensure that all Intelligent Flight Batteries are operating normally before takeoff. If a battery abnormal status appears in the DJI GO app, follow the on-screen instructions. The DJI GO app will instruct you to land if a battery abnormality occurs during flight. In this event, you should land and check the battery immediately.

Low Temperature Notice

1. Using the Intelligent Flight Battery at core temperatures below -10°C is not advised. Between -10°C and 5°C, the Intelligent Flight Battery should attain a voltage of 4.2 V, but it is recommended that you apply the insulation sticker to the battery to prevent a rapid drop in temperature.
2. In cold environments (i.e. air temperature below 5°C), the performance of the Intelligent Flight Battery is reduced. Ensure the Intelligent Flight Battery is fully charged and attains a voltage of 4.35 V before takeoff.
3. In very cold environments (e.g. air temperature of -20°C, battery core temperature of 5°C), the Intelligent Flight Battery's core temperature will drop rapidly even after pre-heating, and its performance is significantly reduced. It is not recommended to fly under such conditions.
4. If the DJI GO app displays the Low Battery Level warning, stop flying and land the aircraft immediately. You will still be able to control the aircraft's movement when this warning is triggered.
5. For the optimal performance, maintain the Intelligent Flight Battery's core temperature above 20°C when in use.

⚠
- Ensure the temperature of the Intelligent Flight Battery exceeds 5°C before takeoff.
- To warm up the battery, power on the Intelligent Flight Battery inside the battery compartment, for approximately 1-2 minutes, before takeoff. Begin flying by hovering the aircraft at a low altitude, for approximately 1 minute, to ensure the battery temperature is stable.

Checking the Battery Level

The Battery Level Indicator shows how much battery capacity is remaining. When the battery is powered off, press the power button once. The Battery Level Indicator will light up to display the current battery level. See the table below for details.

The Battery Level Indicator will show the current battery level during charging and discharging. Its LEDs can exhibit the following behavior.

: LED is on. : LED is blinking.
: LED is off.

 © 2017 DJI All Rights Reserved.

Battery Level Indicator				
LED1	LED2	LED3	LED4	Battery Level
▯	▯	▯	▯	87.5%~100%
▯	▯	▯	▮	75%~87.5%
▯	▯	▯	▯	62.5%~75%
▯	▯	▮	▯	50%~62.5%
▯	▯	▯	▯	37.5%~50%
▯	▮	▯	▯	25%~37.5%
▯	▯	▯	▯	12.5%~25%
▮	▯	▯	▯	0%~12.5%
▯	▯	▯	▯	=0%

Checking the Battery Life

The battery life indicates the number of cycles the battery can be charged and discharged before it must be replaced. When the battery is powered off, press and hold the power button for 5 seconds to check the battery life. The Battery Level LEDs will light up and/or blink as described below for 2 seconds:

Battery Life				
LED1	LED2	LED3	LED4	Battery Life
▯	▯	▯	▯	90%~100%
▯	▯	▯	▮	80%~90%
▯	▯	▯	▯	70%~80%
▯	▯	▮	▯	60%~70%
▯	▯	▯	▯	50%~60%
▯	▮	▯	▯	40%~50%
▯	▯	▯	▯	30%~40%
▮	▯	▯	▯	20%~30%
▯	▯	▯	▯	below 20%

⚠ When the battery life reaches 0%, it can no longer be used.

For more information about the battery, launch the DJI GO app and go to the Battery tab.

© 2017 DJI All Rights Reserved.

Charging the Intelligent Flight Battery

The Matrice 600 Pro is shipped with a DJI Hex Charger. It can charge up to six Intelligent Flight Batteries and two remote controllers simultaneously.

1. Connect the Hex Charger to a power outlet (100-240V, 50/60Hz) with the power cable.
2. Insert the Intelligent Flight Battery into the battery port to begin charging.
3. When the LED lights on the Intelligent Flight Battery turn off, charging is complete and the device can be disconnected from the Hex Charger.

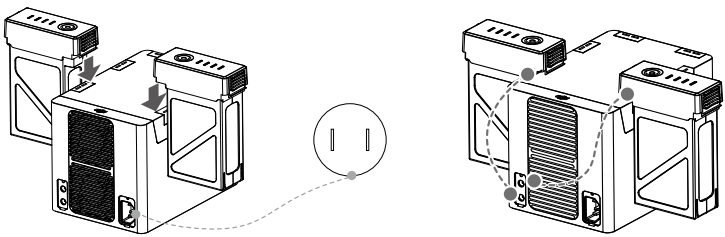

- Place the Hex Charger on a flat and stable surface when in use. Ensure the device is properly insulated to prevent fire hazards.
- DO NOT block the heat vent when using the Hex Charger to ensure that heat can be properly dissipated.
- DO NOT attempt to touch or expose the metal terminals on the Hex Charger.
- Clean the metal terminals with a clean, dry cloth if there is any noticeable buildup.
- The two remote controller ports are connected in parallel with the battery ports as shown in the figure above. As a result, charging a remote controller together with an Intelligent Flight Battery on the corresponding port will require longer charging time.
- Air cool the Intelligent Flight Battery after each flight. Allow its temperature to drop to room temperature before charging.
- The charging temperature range is 5° to 40° C. The battery management system will stop the battery from charging when the battery cell temperature is out of range.

Battery Level Indicator While Charging				
LED1	LED2	LED3	LED4	Battery Level
▮	▯	▯	▯	0%~25%
▮	▮	▯	▯	25%~50%
▮	▮	▮	▯	50%~75%
▮	▮	▮	▮	75%~100%
▯	▯	▯	▯	Fully charged

 © 2017 DJI All Rights Reserved.

Charging Protection LED Display

The table below describes the battery protection mechanisms and their corresponding LED patterns.

Battery Level Indicator While Charging					
LED1	LED2	LED3	LED4	Indicator Pattern	Battery Protection Item
				LED2 blinks twice per second	Overcurrent detected
				LED2 blinks three times per second	Short circuit detected
				LED3 blinks twice per second	Overcharge detected
				LED3 blinks three times per second	Charger overvoltage detected
				LED4 blinks twice per second	Charging temperature is too low (<5°C)
				LED4 blinks three times per second	Charging temperature is too high (>40°C)

After any of the above protection issues are resolved, press the power button to turn off the Battery Level Indicator. Unplug the Intelligent Flight Battery from the battery charger and plug it back in to resume charging. Note that you do not need to unplug and plug the battery charger in the event of a charging temperature error; the battery charger will resume charging when the temperature falls within the normal range.

⚠ DJI does NOT take any responsibility for damage caused by third-party battery chargers.

Calibrating the Battery Capacity:
To effectively calibrate the capacity of the Intelligent Flight Battery, it is recommended to charge and discharge the battery thoroughly for every 10 charge-and-discharge cycles. Choose one of the following methods to discharge battery. After discharging the battery, fully charge the battery to finish the calibration.
Slow: Place the battery into the Matrice 600 Pro's battery compartment and power it on. Leave it on until there is less than 5% battery level, or until it can no longer be turned on. Check the battery level in the DJI GO app.
Fast: Fly the Matrice 600 Pro outdoors until there is less than 5% battery level, or until the battery can no longer be turned on.

© 2017 DJI All Rights Reserved.

Remote Controller

Profile

The remote controller integrates video downlink and aircraft control into one system. The combined system operates at 2.4 GHz with a maximum signal transmission range of 5 km. The device features a number of standard and customizable buttons that allow users to quickly access certain aircraft functions, such as taking and reviewing photos/videos, as well as controlling the gimbal and landing gear. It is powered by a 2S rechargeable battery.

- Stick Mode: Control can be set to Mode 1, Mode 2 (by default), or a custom mode in the DJI GO app.
- Mode 1: The right stick serves as the throttle.
- Mode 2: The left stick serves as the throttle.

DO NOT operate more than 3 aircrafts within in the same area (size equivalent to a soccer field) to prevent transmission interference.

Preparing Remote Controller

Tilt the Mobile Device Holder to the desired position then adjust the antenna as shown.

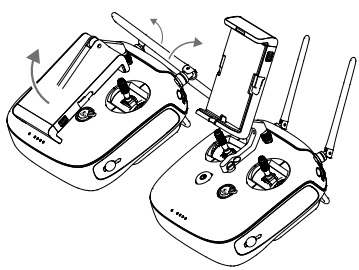

Remote Controller Overview

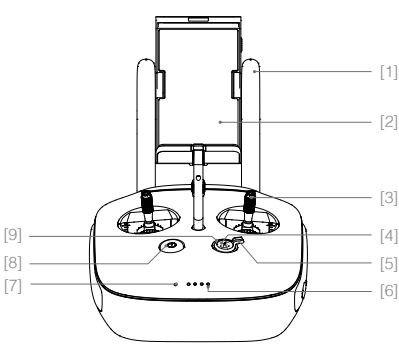

[1] Antennas

Relays aircraft control and video signal.

[2] Mobile Device Holder

Mounting place for your mobile device.

[3] Control Stick

Controls aircraft orientation.

[4] Return-to-Home (RTH) Button

Press and hold the button to initiate Return-to-Home (RTH).

 © 2017 DJI All Rights Reserved.

[5] Landing Gear Control Switch

Toggle the switch up or down to raise or lower the landing gear.

[6] Battery Level LEDs

Displays the current battery level.

[7] Status LED

Displays the power status.

[8] Power Button

Used to power on or power off the remote controller.

[9] RTH Status LED

Circular LED around the RTH button displays RTH status.

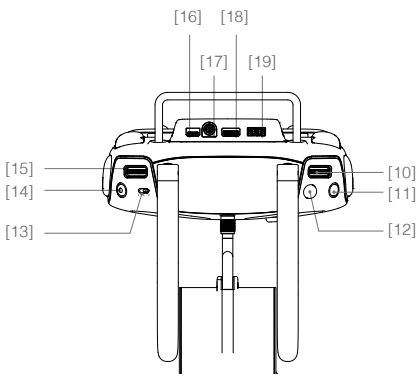

[10] Camera Settings Dial

Turn the dial to adjust camera settings. Only functions when the remote controller is connected to a mobile device running the DJI GO app.

[11] Playback Button

Playback the captured images or videos.

[12] Shutter Button

Press to take a photo. If in burst mode, the set number of photos will be taken with one press.

[13] Flight Mode Switch

Used to switch between P, A and F mode.

[14] Video Recording Button

Press to start recording video. Press again to stop recording.

[15] Gimbal Dial

Use this dial to control the tilt or pan of the gimbal.

[16] Micro USB Port

Reserved.

[17] SDI Port

Connect an SDI display device.

[18] HDMI™ OUT Port

Connect an HD compatible monitor.

[19] USB Port

Connect to mobile device to access all of the DJI GO app controls and features.

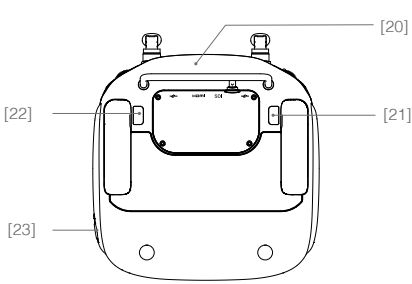

[20] GPS Module

Used to pinpoint the location of the remote controller.

[21] Back Left Button

Customizable button in the DJI GO app.

[22] Back Right Button

Customizable button in the DJI GO app.

[23] Power Port

Connect to a power source to charge the remote controller's internal battery.

© 2017 DJI All Rights Reserved.

Remote Controller Operations

Powering On and Off the Remote Controller

The Matrice 600 Pro remote controller is powered by a 2S rechargeable battery with a capacity of 6000mAh. The battery level is indicated by the Battery Level LEDs on the front panel. Follow the steps below to power on your remote controller:

1. When powered off, press the Power Button once and the Battery Level LEDs will display the current battery level.
2. Then, press and hold the Power Button to power on the remote controller.
3. The remote controller will beep when it powers on. The Status LED will blink red (slave remote controller blinks solid purple) rapidly, indicating that the remote controller is linking to the aircraft. The Status LED will show a solid green light (slave remote controller shows a solid cyan light) when linking is completed.
4. Repeat step 2 to power off the remote controller after finish using it.

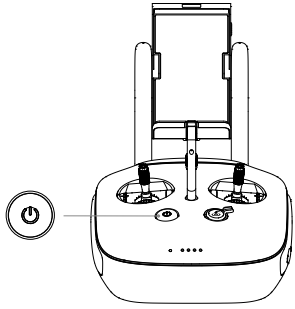

Charging Remote Controller

Charge the remote controller via supplied charger.

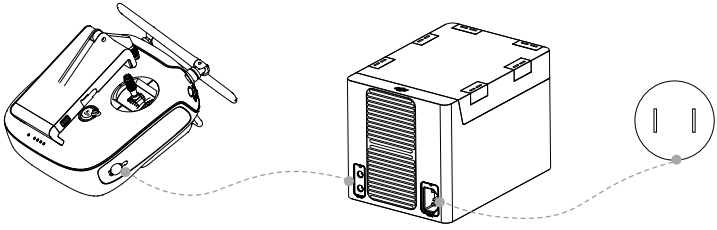

 © 2017 DJI All Rights Reserved.

Controlling the Camera

Shoot videos or images and adjust camera settings via the Shutter Button, Camera Settings Dial, Playback Button and Video Recording Button on the remote controller when using a Zenmuse X3, X5 series or XT gimbal and camera.

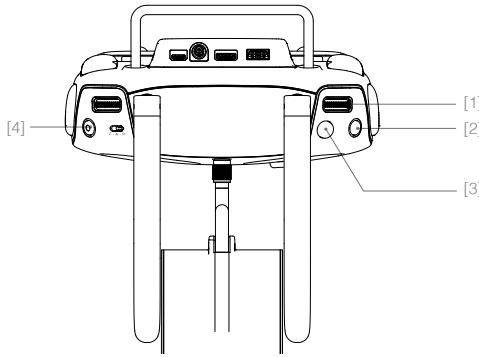

[1] Camera Settings Dial

Turn the dial to quickly adjust camera settings such as ISO and shutter speed without letting go of the remote controller. Move the dial button to left or right to view the pictures or videos in playback mode.

[2] Playback Button

Press to view images or videos that have already been captured.

[3] Shutter Button

Press to take a photo. If burst mode is activated, multiple photos will be taken with a single press.

[4] Recoding Button

Press once to start recording video, then press again to stop recording.

Controlling the Aircraft

This section explains how to use the various features of the remote controller. Mode 2 (throttle stick on the left) is set by default.

© 2017 DJI All Rights Reserved.

Remote Controller	Aircraft (● indicates nose direction)	Function
	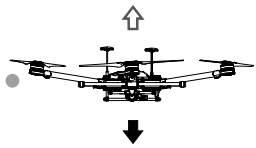	Moving the Left Stick up/down changes the aircraft's elevation. Push it up to ascend and down to descend. Use this stick to take off when the motors are spinning at idle speed. The aircraft will hover in place if the Left Stick is released.
	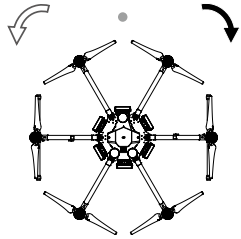	Moving the Left Stick left/right changes the heading of the aircraft. Push it left to rotate the aircraft counter clock-wise, and right to rotate the aircraft clockwise.
		Moving the Right Stick up/down changes the aircraft's forward and backward pitch. Push it up to fly forwards and down to fly backwards. Push the Right Stick further for a larger pitch angle and faster flight.
		Moving the Right Stick left/right changes the aircraft's left and right pitch. Push it left to fly left and right to fly right. Push the Right Stick further for a larger pitch angle and faster flight.
		Turn the Gimbal Dial to control the pitch or pan movement of the gimbal. The Gimbal Dial controls the pitch by default. You can set the back left or back right button to allow the Gimbal Dial to control the pan movement by using the DJI GO app.

⚠ Always push the control sticks gently to prevent sudden and unexpected movement of the aircraft.

 © 2017 DJI All Rights Reserved.

Flight Mode Switch

Toggle the switch to select the desired flight mode.
You may choose between P-mode, A-mode and F-mode.

Figure	Flight Mode
P	P-mode
A	A-mode
F	F-mode

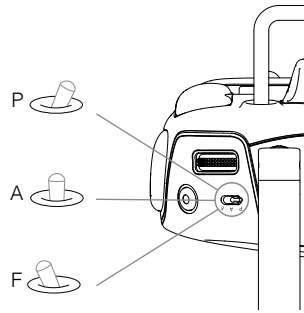

P-mode (Positioning): P-mode works best when GPS signal is strong. There are several states in P-mode which are automatically selected by the Matrice 600 Pro depending on GPS signal strength:

P-GPS: GPS is available. The aircraft uses GPS for positioning.

P-ATTI: GPS is not available. The aircraft only uses its barometer for maintaining altitude.

A-mode (Attitude): GPS is not used for positioning. The aircraft only uses its barometer to maintain altitude. If it is still receiving a GPS signal, the aircraft will automatically Return-to-Home if the remote controller signal is lost, and if the Home Point was recorded successfully.

F-mode (Function): Intelligent Flight Mode and API Control are supported in this mode. Refer to the Intelligent Flight Modes (p. 47) section in the Appendix and SDK in DJI Assistant 2 (p. 30) for more information.
The flight mode is locked in P-mode by default. To enable other flight modes, go to the DJI GO app > Camera View > ⌘ > Enable Multiple Flight Mode.

Atti Mode Warning
The aircraft will enter A-mode in the following two instances:
Passive: When there is weak GPS signal or when the compass experiences interference.
Active: Users toggle the flight mode switch to A-mode.
In A-mode, some advanced features are disabled. Therefore, the aircraft cannot position in this mode and is easily affected by its surroundings, which may result in horizontal shifting. Use the remote controller to position the aircraft.

Maneuvering the aircraft in A-mode can be difficult. Before switching the aircraft into A-mode, make sure you are comfortable flying in this mode. DO NOT fly the aircraft too far away as you might lose control and cause a potential hazard.
Avoid flying in areas where GPS signal is weak, or in confined spaces. The aircraft will otherwise be forced to enter A-mode, leading to potential flight hazards, please land it in a safe place as soon as possible.

Landing Gear Control Switch

This switch has two positions. Toggle the switch up or down to raise or lower the landing gear.

© 2017 DJI All Rights Reserved.

1. Raise: Raise the landing gear to its upper most position. The landing gear will automatically raise when the aircraft reaches an altitude of 1.2 m for the first time.
2. Lower: The landing gear will lower to its lowest position for landing. The landing gear will automatically lower if Auto-Landing is enabled in the DJI GO app or when the aircraft is landing automatically as part of the RTH procedure.

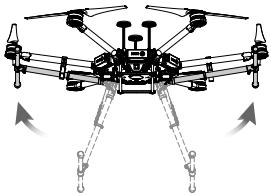

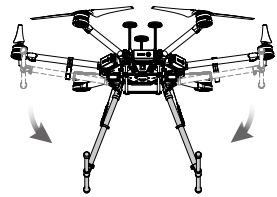

By default, the landing gear will not raise or lower if you toggle the control switch when the aircraft is on the ground. Go to the DJI GO app > Camera View > ⌘ > Advanced Settings > Disable Landing Gear Auto-Lock, and then the landing gear will raise or lower if you toggle the control switch when the aircraft is on the ground. Ensure that the switch is in the lower position when enabling this feature. The feature will be disabled after raising and lowering the landing gear once. Enable it in the DJI GO app if you want to raise or lower the landing gear again.

Auto-raise and auto-lower features of the landing gear can be set in the DJI GO app. Go to the DJI GO app > Camera View > ⌘ > Advanced Settings > Self-Adaptive Landing Gear.

RTH Button

Press and hold this button to start the Return-to-Home (RTH) procedure. The LED around the RTH Button will blink white to indicate the aircraft is entering RTH mode. The aircraft will then return to the last recorded Home Point. Press this button again to cancel the RTH procedure and regain control of the aircraft.

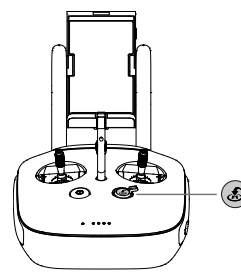

Connecting Mobile Device

1. Press the button on the side of the Mobile Device Holder to release the clamp.
2. Place your mobile device inside the clamp and adjust it to secure your mobile device.
3. Connect your mobile device to the remote controller via a USB cable.

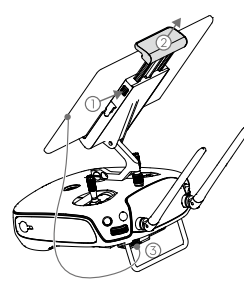

 © 2017 DJI All Rights Reserved.

Optimal Transmission Range

The signal transmission between the aircraft and the remote controller performs best when the aircraft is within the optimal transmission range. Open up the antennas on the remote controller to optimize transmission range. Ideally, the flat surface of the antenna should be facing the aircraft. If the signal is weak, fly the aircraft closer to you.

Dual Remote Controllers Mode

More than one remote controller can be connected to the same aircraft in the Dual Remote Controllers mode. When using a DJI gimbal in the Dual Remote Controllers mode, the Master remote controller controls the movement of the aircraft, while the Slave remote controller controls the movement of the gimbal. When multiple Slave remote controllers (max 3) are connected to the aircraft, only the first connected Slave remote controller is able to control the gimbal. The remaining Slave remote controllers can view the live feed video from the aircraft and set the camera parameters, but cannot control the gimbal.

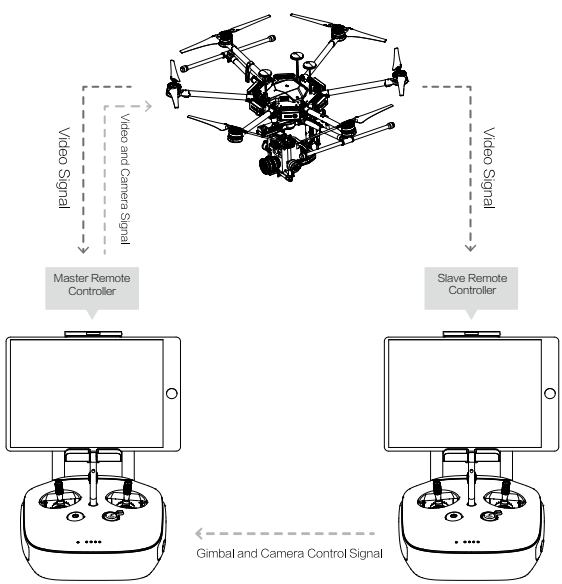

⚠ Use the gimbal dial on the remote controller to tilt the camera in the Single Remote Controller mode. In Dual Remote Controllers mode, use the Slave remote controller to tilt, pan or roll the camera.

© 2017 DJI All Rights Reserved.

Setting Up Dual Remote Controllers Mode

The Dual Remote Controllers mode is disabled by default. Users must enable this feature on the Master Remote Controller through the DJI GO app. Follow the steps below for setup:

Master Remote Controller:

1. Connect the remote controller to your mobile device and launch the DJI GO app.
2. Go to the Camera View, and tap to enter the remote controller settings window.
3. Select Master in the Set Remote Controller Status section to set the remote controller as the Master remote controller.

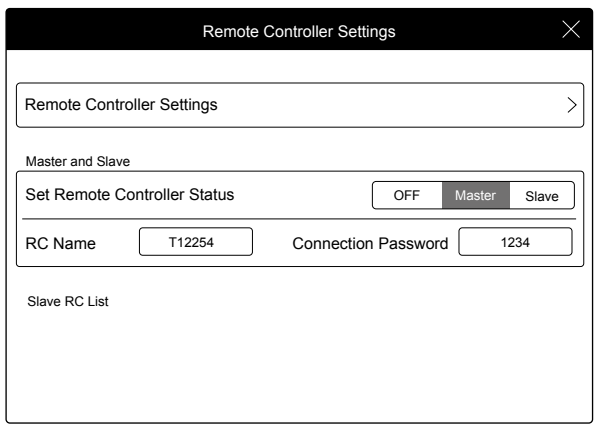

4. Enter the connection password for the Slave remote controller.

Slave Remote Controller:

1. Select Slave in the Set Remote Controller Status section to set the remote controller as the Slave remote controller.

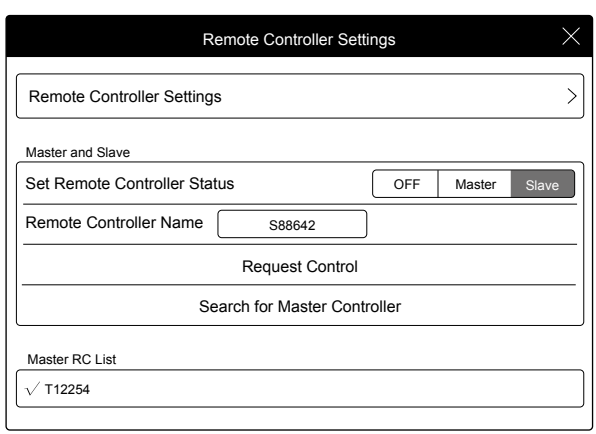

 © 2017 DJI All Rights Reserved.

2. Tap Search for Master Controller to register the Master remote controller.

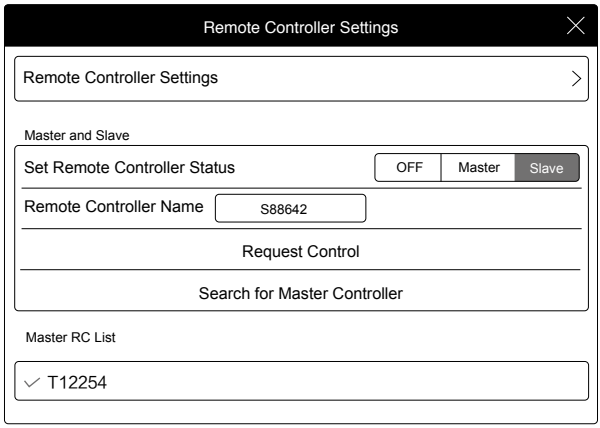

3. Select the name of the remote controller from the Master RC List and input the connection password to connect to the desired Master remote controller.

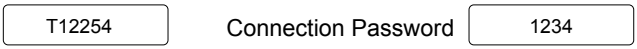

⚠ The remote controller cannot link to the aircraft or control aircraft movement if it is set to Slave. Set the remote controller as Master in the DJI GO app if you want to link the remote controller to the aircraft.

Remote Controller LEDs

The Status LED reflects connection status between the remote controller and the aircraft. The RTH Status LED indicates the Return-to-Home status of the aircraft. See the table below for details on these indicators.

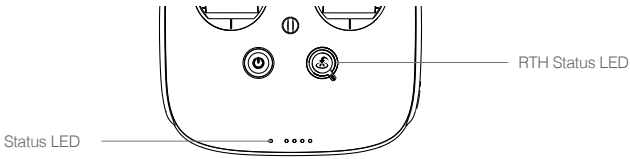

© 2017 DJI All Rights Reserved.

Status LED	Alarm	Remote Controller Status
Ⓡ —— Solid Red	♪ chime	The remote controller is set as Master but is not connected to the aircraft.
Ⓖ —— Solid Green	♪ chime	The remote controller is set as Master and connected to the aircraft.
Ⓟ —— Solid Purple	2 beeps	The remote controller is set as Slave but is not connected to the aircraft.
Ⓒ —— Solid Cyan	2 beeps and chime	The remote controller is set as Slave and connected to the aircraft.
Ⓡ ····· Blinking Red	1 slow beep repeating	Remote controller error. Refer to the DJI GO app for details.
RTH Status LED	**Sound**	**Aircraft Status**
Ⓦ —— Solid White	♪ chime	RTH procedure begins.
Ⓦ ····· Blinking White	1 beep repeating	Sending RTH command to the aircraft.
Ⓦ ····· Blinking White	2 beeps repeating	Aircraft RTH in progress.

Linking the Remote Controller

The remote controller is linked to your aircraft by default. Linking is only required when a new remote controller is used for the first time. Follow these steps to link a new remote controller:

1. Power on the remote controller and connect it to your mobile device. Then power on the aircraft.
2. Go to the DJI GO app > Camera View > > Remote Controller Settings > Linking Remote Controller.

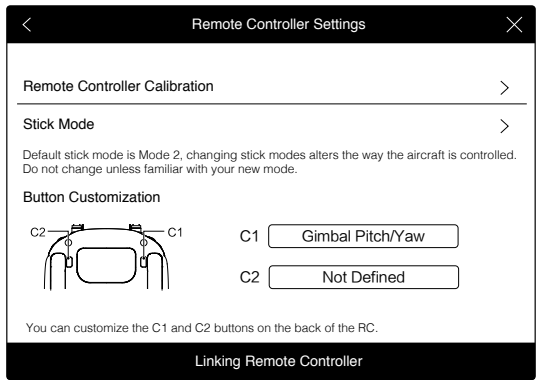

 © 2017 DJI All Rights Reserved.

3. The remote controller Status LED will blink blue and beep to indicate that the remote controller is ready to be linked.

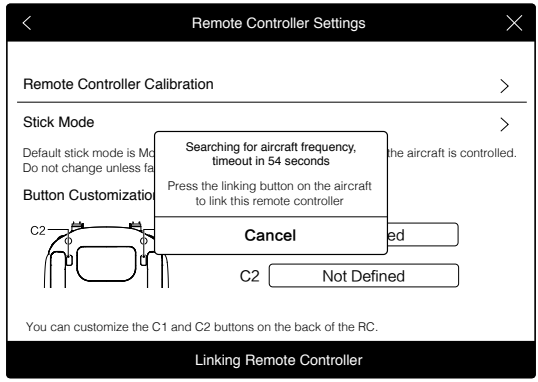

4. Press the LINK Button on the Lightbridge 2 Air System (shown in the figure below) to begin linking. The remote controller Status LED will glow solid green if linking is successful.

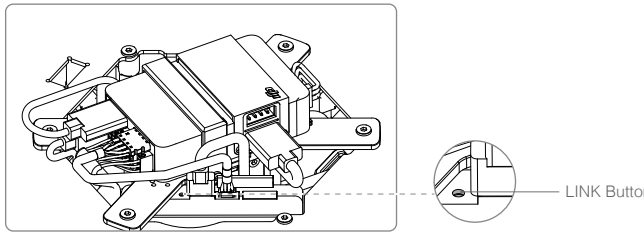

- The remote controller cannot link to the aircraft or control aircraft movement if it is set to Slave. Set the remote controller as Master in the DJI GO app if you want to link the remote controller to the aircraft.
- The remote controller will disconnect from the linked aircraft if another remote controller attempts to link to the same aircraft.

© 2017 DJI All Rights Reserved.

Return-to-Home (RTH)

Profile

The Return-to-Home (RTH) function brings the aircraft back to the last recorded Home Point. There are three events that will trigger RTH procedure: Smart RTH, Low Battery RTH and Failsafe RTH.

	GPS	Description
Home Point		The default Home Point is the first location where your aircraft received strong GPS signals (i.e. the white GPS icon is followed by at least four white bars). You can update the Home Point via the DJI GO app. Refer to Updating Home Point (p. 28) for details.

Smart RTH

Use the RTH button on the remote controller (see RTH Button on p. 20 for more details) or the RTH button in the DJI GO app when GPS is available to enable Smart RTH. With Smart RTH, you may control the aircraft's orientation to avoid collision when it is returning to the Home Point. Press and hold the Smart RTH button to start the RTH procedure, then press the Smart RTH button again to exit Smart RTH and regain control of the aircraft.

Low Battery RTH

Low Battery RTH is triggered when the DJI Intelligent Flight Battery is depleted to a point which may affect the safe return of the aircraft. Users are advised to fly back or land the aircraft immediately when these warnings are shown. The DJI GO app will advise users to return the aircraft to the Home Point when the low battery warning is triggered. The aircraft will automatically return to the Home Point if no action is taken after 10 seconds. User can cancel the RTH procedure by pressing on the RTH button once. The thresholds for these warnings are automatically determined based on the current aircraft altitude and its distance from the Home Point.
The aircraft will land automatically (cannot be canceled) if the current battery level can only support the aircraft to land to the ground from its current position. Users can use the remote controller to control the aircraft's movement during the landing process.
The figure below describes the behavior of the Battery Level Indicator during different stages of events.

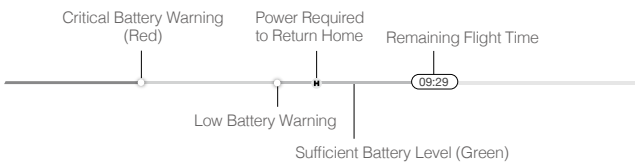

 © 2017 DJI All Rights Reserved.

Battery Level	Description	Aircraft Status Indicator	DJI GO App	Flight Instructions
Low Battery Warning	The battery level is low. Please land the aircraft.	Aircraft Status Indicator blinking RED slowly.	Tap Go-Home to make the aircraft return to Home Point and land automatically, or Cancel to resume normal flight. If no action is taken, the aircraft will automatically return to the Home Point and land after 10 seconds.	Fly the aircraft back and land it as soon as possible, then stop the motors and replace the battery.
Critical Battery Warning	The aircraft must land immediately.	Aircraft Status Indicator blinking RED rapidly.	The DJI GO app screen will flash red and the aircraft will begin to descend.	The aircraft will begin to descend and land automatically.
Remaining Flight Time	Estimated remaining flight time based on the current battery level.	N/A	N/A	N/A

- When the critically low battery level warning is triggered and the aircraft is descending to land automatically, you may push the throttle stick upwards to hover the aircraft and navigate it to a more appropriate location for landing.
- Color zones and markers on the battery level indicator reflect the estimated remaining flight time and are adjusted automatically, according to the aircraft's current status.

Failsafe RTH

Failsafe RTH is activated automatically if the remote controller signal (including video relay signal) is lost for more than 3 seconds provided that the Home Point has been successfully recorded and the compass is working normally. The operator can interrupt the Return-to-Home procedure and regain control over the aircraft if the remote controller signal is recovered.

Failsafe Illustration

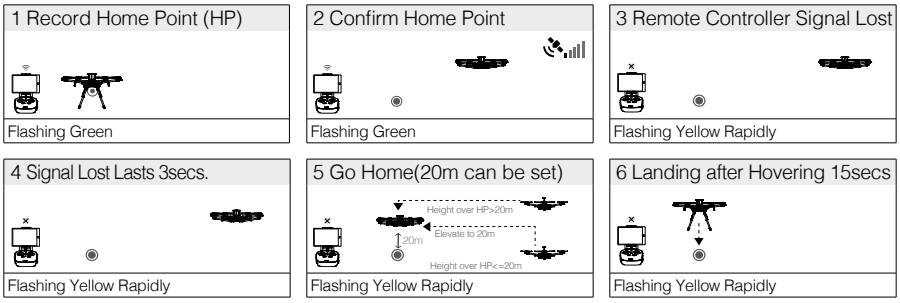

© 2017 DJI All Rights Reserved.

RTH Safety Notices

	The aircraft cannot avoid obstruction during RTH, therefore it is important to set a reasonable RTH altitude before each flight. Go to the DJI GO app > Camera View > > Set Return-to-Home Altitude.
20m	If the aircraft is flying under 20 meters (65 feet) and RTH (including Smart RTH, Low Battery RTH and Failsafe RTH) is triggered, the aircraft will first automatically ascend to 20 meters (65 feet) from the current altitude and you cannot control the aircraft during ascending. In Smart RTH, you can exit RTH to cancel the ascending by pressing the RTH button once.
20m H	The aircraft automatically descends and lands if RTH is triggered when the aircraft flies within a 65 feet (20 meter) radius of the Home Point.
	Aircraft cannot return to the Home Point when GPS signal is weak (displays red) or unavailable.
	The aircraft will stop ascending and immediately return to the Home Point if you move the throttle stick during Failsafe RTH.

Updating the Home Point

You can update the Home Point in the DJI GO app during flight. There are two options for setting the Home Point:

1. Set the aircraft's current coordinates as the Home Point.
2. Set the remote controller's current coordinates as the Home Point.

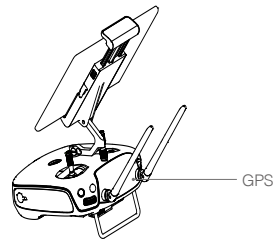

⚠ Ensure the space above the GPS module (shown in the figure) is not obstructed when updating the Home Point.

Follow the instructions below to update the Home Point:

1. Connect your mobile device to the remote controller and go to the DJI GO app > Camera View > .
2. Tap to set the remote controller's current coordinates as the Home Point; tap to set the aircraft's current coordinates as the Home Point.
3. The Aircraft Status Indicator will blink green to indicate that the new Home Point has been set successfully.

 © 2017 DJI All Rights Reserved.

A3 Pro Redundancy System

The Matrice 600 Pro's A3 Pro flight control system is an upgraded version of the A3, which enhances flight safety. The A3 includes a flight controller, GPS-Compass Pro and a PMU (Power Management Unit). With two additional IMU Pro and GPS-Compass Pro modules, the A3 Pro provides triple-modular redundancy, improving the system's anti-risk performance.

Mounting Positions

Ensure that the settings of all the IMU Pro modules and GPS-Compass Pro modules are correct before each flight. Identify the module according to the number of times the module's LED blinks (e.g. If a GPS blinks once, it is "GPS1"). Then enter each module's corresponding mounting position into the appropriate fields in DJI Assistant 2. The default mounting positions are shown as below:

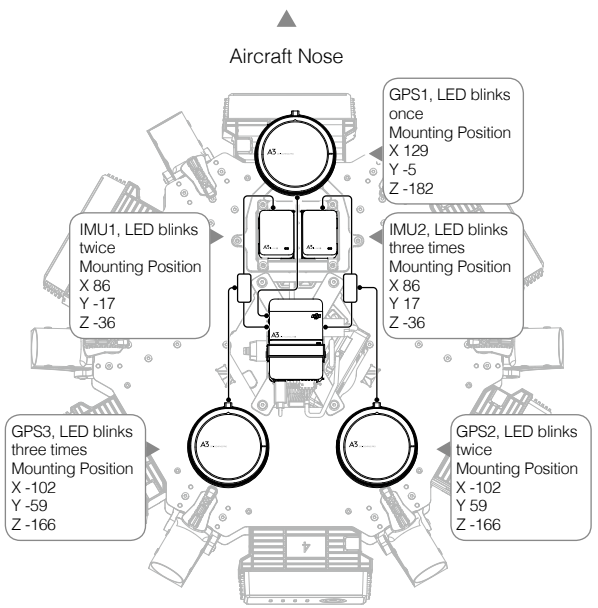

System Status

System status is indicated by LEDs on the GPS-Compass Pro, IMU Pro and Flight Controller modules.

LED Indicator	Status
Ⓖ Green	The module is functioning normally and working as a part of the system when the LED is blinking green.
Ⓡ Red	The module is functioning abnormally when the LED is blinking red.
Ⓑ Blue	The module is functioning normally but not working as a part of the system when the LED is blinking blue.

© 2017 DJI All Rights Reserved.

DJI Assistant 2

⚠ When using your Matrice 600 Pro for the first time, activate it in the DJI Assistant 2 software.

Installation and Launching

1. Download the DJI Assistant 2 installation file from the official DJI website: http://www.dji.com/matrice600-pro/info#downloads
2. Complete the installation for the DJI Assistant 2 software.
3. Launch the DJI Assistant 2 software.

Using the DJI Assistant 2

1. Ensure that all the six Intelligent Flight Batteries are fully charged and then install them.
2. Power on the remote controller, and then turn on one of the Intelligent Flight Batteries in the aircraft. If other batteries are not triggered automatically, connect your mobile device to the remote controller and go to the DJI GO app for information.
3. Connect the Micro USB port (at the bottom of the Aircraft Status Indicator) of the Matrice 600 Pro to the computer with a Micro USB cable. Do not disconnect the cable until configuration is finished.
4. When a connection is established, the software will display the connected devices: “M600 Pro” and “Lightbridge 2”. Click the corresponding device to configure settings.

⚠ If the software doesn’t display both of the connected devices, check the USB connection between the aircraft and the computer, and the driver on your computer.

M600 Pro

Activating the Aircraft

When using your Matrice 600 Pro for the first time, click on the “M600 Pro” icon and you will be prompted to activate the aircraft on your computer. Follow the steps on-screen to activate the aircraft.

Basic Settings

Modular Redundancy System

Identify the module according to the number of times the module’s LED blinks (e.g. If a GPS blinks once, it is “GPS1”). Then enter each module’s corresponding mounting position into the appropriate fields. Ensure that the values are correct, or else the aircraft’s positioning will be off.

DJI Device

If using the D-RTK GNSS, enter the antenna mounting positions into the appropriate fields.

SDK

Enable API Control

If you are using the DJI SDK, select Enable API Control to allow the flight control system to communicate with external devices such as an on-board computer. The external device will be able to control the aircraft only if the Flight Mode Switch on the remote controller is toggled to F-mode. For information on setting the API parameters, read the related documents and manuals on the DJI SDK page of the DJI Developer website (https://developer.dji.com).

 © 2017 DJI All Rights Reserved.

- API Control and the Intelligent Flight Modes cannot be used at the same time. If you are using Intelligent Flight Mode, finish the current intelligent flight mission and toggle the Flight Mode Switch to F-mode again to use API Control.
- API Control is automatically disabled after firmware updates. Re-enable this option if necessary.

Ground Station Status

If Ground Station Status is enabled, the data from the flight control system to external devices will include information on the Ground Station mission.

Battery Manager

View the battery information on this page.

Firmware Update

Check the current firmware version of the aircraft and ensure the installed firmware is up-to-date. If not, login with your DJI account and click the Upgrade button.

- Ensure that your computer has internet access, or else you cannot get the latest firmware.
- Ensure that the Intelligent Flight Batteries have enough power supply.
- The aircraft settings may be reset after firmware upgrade. Check the settings.

Simulator

Use the simulator for flight training according to the tips in the software.

Lightbridge 2

Firmware Update

Check the current firmware version of the Lightbridge 2 Air System and ensure the installed firmware is up-to-date. If not, login with your DJI account and click the Upgrade button.

- Ensure that your computer has internet access, or else you cannot get the latest firmware.
- Ensure that the Intelligent Flight Batteries have enough power supply.
- Both the Lightbridge 2 Air System and the remote controller firmware must be up-to-date, or else they will not link.
- Update the remote controller firmware via the DJI GO app. Refer to Upgrading the Firmware (p. 48) for details.
- Restart the aircraft after upgrading the aircraft and Lightbridge 2 Air System firmware.

© 2017 DJI All Rights Reserved.

DJI GO App

Use the DJI GO app to configure your aircraft. If using a gimbal or camera, you can also control the gimbal or camera in the app. The Library, Skypixel, and Me sections in the app allow you to share your content with friends.

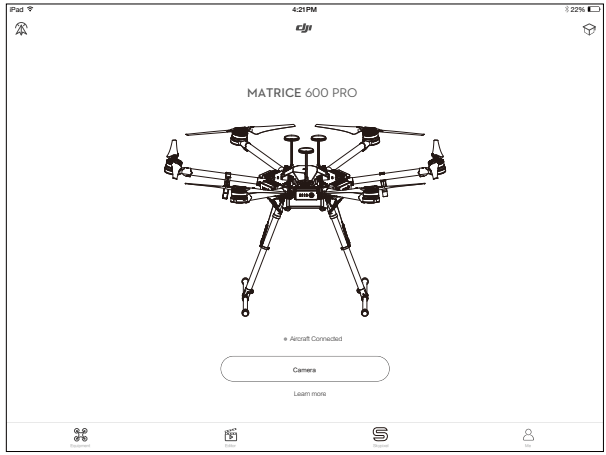

Equipment

On the Equipment page, you can enter Camera View, visit the Academy or view your flight records.

Camera View

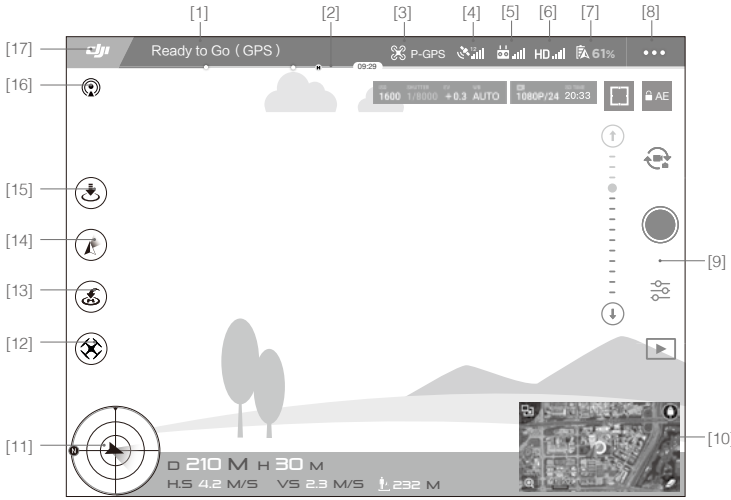

 © 2017 DJI All Rights Reserved.

[1] System Status

Ready to Go (GPS) : Indicates the current aircraft system status and GPS signal strength.

[2] Battery Level Indicator

: Describes the battery level of the aircraft according to its immediate status. The colored zones represent the various stages of battery level. When the battery level drops to a certain stage, the system will prompt the user to take the appropriate action.

[3] Flight Mode

: The text next to this icon indicates the current flight mode.
Tap this icon to configure the Main Controller Settings, to change the flight limits and set the gain values.

[4] GPS Signal Strength

: Shows the current GPS signal strength. White bars indicate adequate GPS strength.

[5] Remote Controller Signal

: Shows the signal strength of the remote controller.

[6] HD Video Link Signal Strength

HD : Shows the signal strength of the HD video downlink between the aircraft and the remote controller.

[7] Battery Level

61% : Shows the current battery level.
Tap this icon to view the battery information menu where you can set the battery warning thresholds and view the battery log.

[8] General Settings

••• : Tap this icon to view General Settings where you can set the flight parameters, and enable the Flight Route display.

[9] Camera Operation Bar

This bar will be displayed when using a Zenmuse X3, X5 series or XT gimbal and camera.

Photo / Video Button

: Tap to switch between photo and video recording modes.

Shoot / Record Button

/ : Tap to start shooting photos or recording video.

Camera Settings

: Tap this icon to set the ISO, Shutter Speed and Exposure Value of the camera.

Playback

: Tap this icon to play back photos and videos after they are captured.

© 2017 DJI All Rights Reserved.

[10] Mini Map

Displays the flight path of the current flight. Tap the Mini Map to switch between Camera View and Map View.

[11] Flight Telemetry

Flight Attitude and Radar Function:

The aircraft's flight attitude is indicated by the target-like icon.

(1) The red arrow shows which direction the aircraft is facing.

(2) The ratio of the grey area to the blue area indicates the aircraft's pitch.

(3) The horizontal level of the grey area indicates the aircraft's roll angle.

Flight Parameters:

Altitude: Vertical distance from the Home Point.

Distance: Horizontal distance from the Home Point.

Vertical Speed: Movement speed across a vertical distance.

Horizontal Speed: Movement speed across a horizontal distance.

Aircraft Distance:

The horizontal distance between the aircraft and the operator.

[12] Intelligent Flight Mode

: This icon displays the Intelligent Flight Mode settings when the aircraft has entered F-mode. Tap to select one of the Intelligent Flight Modes. Refer to Intelligent Flight Modes (p. 47) for details.

[13] Return-to-Home (RTH)

: Initiate RTH home procedure. Tap to have the aircraft return to the latest Home Point.

[14] Gimbal Operation Mode

This icon will be displayed when using a DJI gimbal (or camera). Tap to select a mode or re-align the gimbal.

 © 2017 DJI All Rights Reserved.

	Follow Mode	The gimbal's orientation is aligned with the aircraft's nose. One user alone can control the pitch motion of the gimbal, but a second operator is required to control the yaw motion using a second remote controller.
	FPV Mode	The gimbal will lock to the movement of the aircraft to provide a First-Person-View flying experience.
	Free Mode	The gimbal's motion is independent of the aircraft's orientation. One user alone can control the pitch motion of the gimbal, but a second user is required to control the yaw motion using a second remote controller.
	Re-alignment	Re-align the yaw angle of the gimbal with that of the aircraft. The pitch angle remains unchanged during the re-alignment.

[15] Auto Takeoff / Landing

/ : Tap to initiate auto takeoff or landing.

[16] Livestream

: This icon indicates the current video feed is being broadcast live on YouTube. Ensure that mobile data service is available on your mobile device.

[17] Back

: Tap this icon to return to the main menu.

Editor

An intelligent video editor is built into the DJI GO app. After recording several video clips and downloading them to your mobile device, go to Editor on the home screen. You can then select a template and a specified number of clips which are automatically combined to create a short film that can be shared immediately.

Skypixel

Find out about our latest events, featured products and trending Skypixel uploads in the this page.

Me

If you already have a DJI account, you will be able to participate in forum discussions, earn Credits in the DJI Store, and share your artwork with the community.

© 2017 DJI All Rights Reserved.

Flight

Once pre-flight preparation is complete, it is recommended to use the flight simulator to learn how to fly safely. Ensure that all flights are carried out in an open area.

Flight Environment

1. Do not use the aircraft in adverse weather conditions including rain, snow, fog, and wind speeds exceeding 8 m/s.
2. Only fly in open areas. Tall buildings and steel structures may affect the accuracy of the compass and the GPS signal.
3. Avoid flying near obstacles, crowds, high voltage power lines, trees and bodies of water.
4. Avoid flying in areas with high levels of electromagnetism, including mobile phone base stations and radio transmission towers.
5. Aircraft and battery performance is subject to environmental factors such as air density and temperature. Be very careful when flying over 8,202 feet (2,500 meters) above sea level as the battery and aircraft performance may be reduced.
6. The Matrice 600 Pro cannot operate in P-mode within the Earth's polar regions.

Flight Limits and No Fly Zones

Flight limits on height and distance can be set.
Unmanned aerial vehicle (UAV) operators should abide by the regulations from self-regulatory organizations such as the ICAO (International Civil Aviation Organization), the FAA and their local aviation authorities. For safety reasons, flight limits are enabled by default to help users use this product safely and legally.
When operating in P-mode, the height limit, distance limit and No Fly Zones work together to monitor flight. In A-mode, only the height limit prevents the aircraft from going above 50 meters*.

* The value is set to 120 if the aircraft has ever received a strong GPS signal (i.e. at least three bars are displayed after the GPS icon) when powered on.

Maximum Height and Radius Limits

Users can change the maximum height and radius limits in the DJI GO app. Once complete, your Matrice 600 Pro will fly in a restricted cylinder that is determined by these settings. The tables below show the details of these limits.

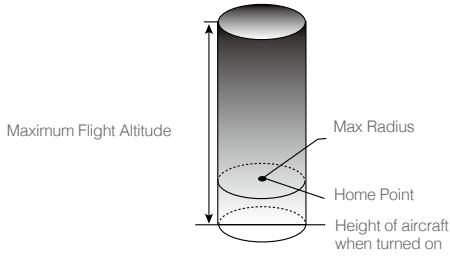

 © 2017 DJI All Rights Reserved.

Safe to Fly (GPS) G ····· Blinking Green Slowly		
	Flight Limits	DJI GO App
Max Height	Flight altitude must be below the preset height.	Warning: Height limit reached.
Max Radius	Flight distance must be within the max radius.	Warning: Distance limit reached.

Safe to Fly (No GPS) Y ····· Blinking Yellow Slowly		
	Flight Limits	DJI GO App
Max Height	If the Max Flight Altitude set in the DJI GO app is ≤ 50m*, the flight altitude will not exceed the preset value. If the Flight Altitude set in the DJI GO app is > 50m*, the flight altitude will not exceed 50m*.	Warning: Height limit reached.
Max Radius	No limit.	

* The value is set to 120 if the aircraft has ever received a strong GPS signal (i.e. at least three white bars are displayed after the GPS icon) when powered on.

- If you fly out of bounds, you can still control the Matrice 600 Pro, but cannot fly it further.
- If the Matrice 600 Pro loses GPS signal and flies out of the max radius but regains GPS signal afterwards, it will fly back within range automatically.

No Fly Zones

All No Fly Zones are listed on the DJI official website at http://flysafe.dji.com/no-fly. No Fly Zones are divided into Airports and Restricted Areas. Airports include major airports and flying fields where manned aircraft operates at low altitudes. Restricted Areas include borders between countries or sensitive sites. The details of the No Fly Zones are explained below:

Airports (requires GPS):

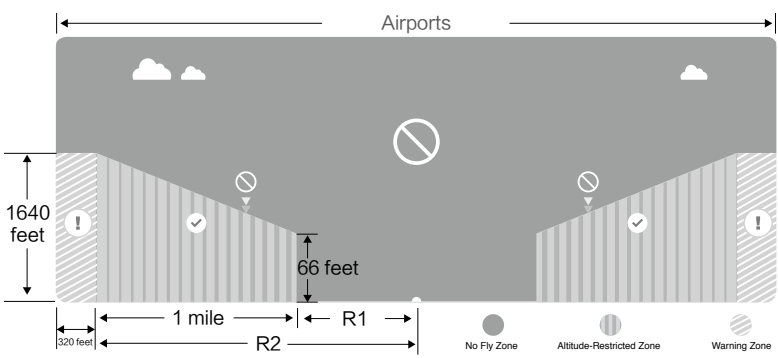

1. Airport No Fly Zones are comprised of a no fly zone and an altitude-restricted zone. Each type of zone encompasses a radius of a certain size.

© 2017 DJI All Rights Reserved.

2. R1 miles around the airport (depending on its shape and size) encompasses the no fly zone, inside of which takeoff and flight are prohibited.
3. From R1 to R1+1 miles around the airport, the flight altitude is limited at a 15 degree incline, starting at 66 feet (20 meters) from the edge of airport and radiating outwards. The flight altitude is limited to 1640 feet (500 meters) at R1+1 miles.
4. When the aircraft is within 320 feet (100 meters) of a no fly zone, a warning message will appear in the DJI GO app.

Restricted Areas (requires GPS):

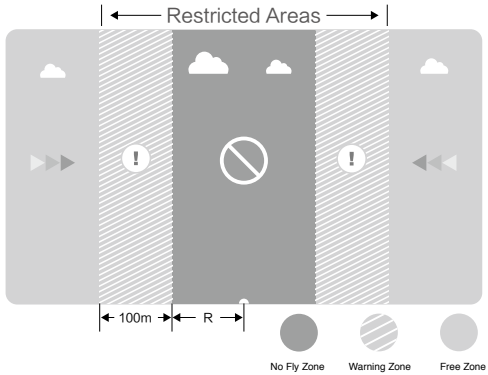

1. Restricted Areas do not have an altitude-restricted zone.
2. R miles around the Restricted Area (depending on the regulation) is a no fly zone, inside of which takeoff and flight are prohibited.
3. A Warning Zone is set on the perimeter of the Restricted Area. When the aircraft is within 0.062 miles (100 m) of the no fly zone (inside the Warning Zone), a warning message will appear in the DJI GO app.

 © 2017 DJI All Rights Reserved.

Safe to Fly (GPS) Ⓖ ····· Blinking Green Slowly			
Zone	Restrictions	DJI GO App Warning	Aircraft Status Indicator
No Fly Zone	Motors will not start.	Warning: You are in a no fly zone. Takeoff prohibited.	Ⓡ ····· Blinking Red
	If the aircraft loses GPS signal and enters the restricted area but regains GPS signal afterwards, the aircraft will enter Semi-Automatic Descent and land itself.	Warning: You are in a no fly zone. Automatic landing has begun. (If the aircraft is within R1)	
Altitude-Restricted Zone	If the aircraft loses GPS signal and enters the restricted area but regains GPS signal afterwards, it will descend to a safe altitude and hover 15 feet below the safe altitude.	Warning: You are in a restricted zone. Descending to a safe altitude. (If the aircraft is within R2 but outside R1) Warning: You are in a restricted zone. Max flight height restricted between 20 and 500 m. Fly Cautiously.	
Warning Zone	No flight restrictions.	Warning: You are approaching a Restricted Area. Fly cautiously.	
Free Zone	No flight restrictions.	None.	None.

Semi-Automatic Descent: All stick commands are available except the throttle stick command during the descent and landing process. Motors will stop automatically after landing.

- When flying in No Fly Zones, the Aircraft Status Indicator will blink red slowly and continue for 5 seconds, then switch to indicate the current flying status and continue for 7 seconds, at which point it will switch back to blinking red slowly.
- For safety reasons, please do NOT fly close to airports, highways, railway stations, railway lines, city centers or other busy areas. Try to ensure the aircraft is visible at all times.

Pre-Flight Checklist

Before each flight, make sure:

1. All firmware is up-to-date.
2. The remote controller, Intelligent Flight Batteries and your mobile device are fully charged.
3. Frame arms and propellers are unfolded.
4. All the GPS-Compass Pro are unfolded and the arrows on the GPS-Compass Pro point toward the front of the aircraft.

© 2017 DJI All Rights Reserved.

5. All cables are connected correctly and firmly.
6. The DJI GO app is connected to the aircraft.
7. Motors start properly and are functioning as normal.

Flight Status Indicators

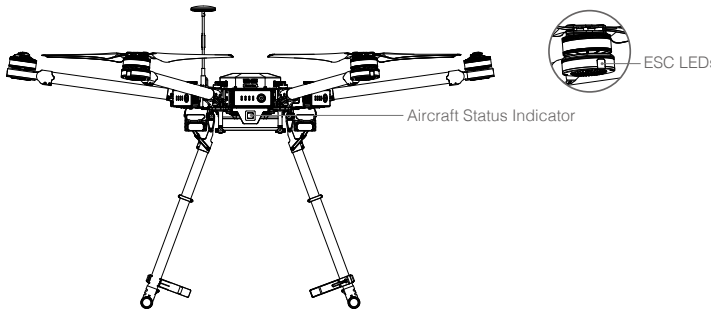

ESC LEDs

There is an ESC LED on each frame arm of the Matrice 600 Pro to show the orientation of the aircraft after motors started. The ESC LEDs located on frame arms M1 and M2 are red. The ESC LEDs located on frame arms M3 to M6 are green. All the ESC LEDs will be solid yellow when motors are rotating at full throttle.

Aircraft Status Indicator

The Aircraft Status Indicator shows the system status of the flight controller. Refer to the table below for more information about the Aircraft Status Indicator:

Normal	
R G Y ····· Blinking Red, Green and Yellow Alternatively	Power on and self-check
Y ×4 Blinking Yellow Four Times	Aircraft warming up
G ····· Blinking Green Slowly	P-GPS
Y ····· Blinking Yellow Slowly	P-ATTI or ATTI mode
Y ····· Blinking Yellow (Alternates with other flight mode and D-RTK patterns)	Intelligent Flight Mode
R ····· Blinking Red (Alternates with flight mode patterns)	Searching for RTK signal. The aircraft cannot take off.
B ····· Blinking Blue (Alternates with flight mode patterns)	Using D-RTK GNSS
B ····· Blinking Blue Rapidly for 1.5 seconds	Switching devices (IMU or GPS modules) for the modular redundancy system

 © 2017 DJI All Rights Reserved.

Warning	
Ⓨ ····· Blinking Yellow Rapidly	Remote controller signal lost
Ⓡ ····· Blinking Red Slowly	Low battery warning
Ⓡ ····· Blinking Red Rapidly	Critically low battery warning
Ⓡ ····· Blinking Red Rapidly for 0.6 second when performing CSC	Large IMU bias or IMU initialization
Ⓡ —— Solid Red	Critical error, contact DJI Support
Ⓡ Ⓨ ····· Blinking Red and Yellow Alternatively	Compass calibration required

Calibrating the Compass

Be sure to calibrate the compass before your first flight, or else the aircraft cannot work properly. After that, calibrate the compass when the DJI GO app or the Aircraft Status Indicator prompts you to do so.

- DO NOT calibrate your compass where there is a chance of strong magnetic interference, such as magnetite quarries, parking structures, and underground steel reinforcements.
- DO NOT carry ferromagnetic objects such as cellular phones with you during calibration.

Calibration Procedures

Choose an open space to carry out the following procedures.

1. Tap the System Status bar in the app and select Calibrate, then follow the on-screen instructions to calibrate the aircraft step-by-step.
2. Hold the aircraft horizontally, and rotate it 360 degrees along the central axis. The Aircraft Status Indicator will emit a solid green light.
3. Hold the aircraft vertically with its nose pointing downwards, and rotate it 360 degrees around its central axis.

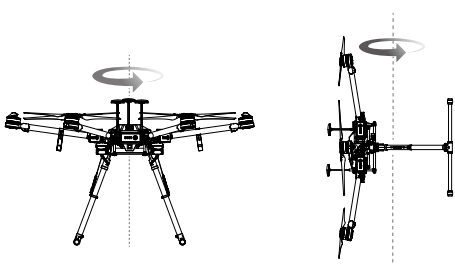

4. Recalibrate the compass if the Aircraft Status Indicator blinks red.

- Calibrate the compass after you launch the DJI GO app if you are prompted to do so.
- After successful calibration, the compass may become abnormal and the DJI GO app will prompt you to recalibrate the compass when you place the aircraft on the ground. Move the aircraft to another location.
- The DJI GO app will prompt you to resolve the compass issue if the compass is affected by strong interference after calibration is complete. Follow the prompted instructions to resolve the compass issue.

© 2017 DJI All Rights Reserved.

When to Recalibrate

1. The compass data is abnormal, and the Aircraft Status Indicator is blinking red and yellow alternatively.
2. Flying in a new location, or a location that is different from your last flight.
3. The mechanical structure of the Matrice 600 Pro is changed, i.e. the mounting position of the GPS module is changed.
4. Severe drifting occurs in flight, i.e. the Matrice 600 Pro has difficulty flying in a straight line.

Auto Takeoff and Auto Landing

Auto Takeoff

Use Auto Takeoff to take off your aircraft automatically if the Aircraft Status Indicator is blinking green. Follow the steps below to use Auto Takeoff:

1. Launch the DJI GO app and enter the Camera View.
2. Ensure that the aircraft is in P-mode.
3. Go through the pre-flight checklist.
4. Tap and slide Confirm to take off.
5. The aircraft will take off and hover 1.2 meters above the ground, and then raise the landing gear automatically.

Auto Landing

Use Auto Landing to land your aircraft automatically if the Aircraft Status Indicator is blinking green. Follow the steps below to use Auto Landing:

1. Ensure that the aircraft is in P-mode.
2. Check that the landing area is clear before tapping to land the aircraft.
3. The aircraft will lower the landing gear and begin to land automatically.

The landing gear will automatically raise when the aircraft reaches an altitude of 1.2 m for the first time, and will automatically lower when the aircraft begins to land automatically. Users can turn this feature ON/OFF in the DJI GO app.

Starting and Stopping the Motors

Starting the Motors

A Combination Stick Command (CSC) is used to start/stop the motors. Push both sticks to the bottom inner or outer corners to start the motors. Once the motors have started spinning, release both sticks simultaneously.

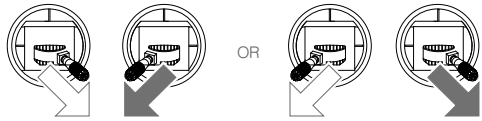

 © 2017 DJI All Rights Reserved.

Stopping the Motors

There are two methods to stop the motors.
Method 1: When the Matrice 600 Pro has landed, push the throttle stick down, then perform the CSC command to stop the motors. Release both sticks once the motors have stopped.
Method 2: When the aircraft has landed, push the throttle down and hold. The motors will stop after 3 seconds.

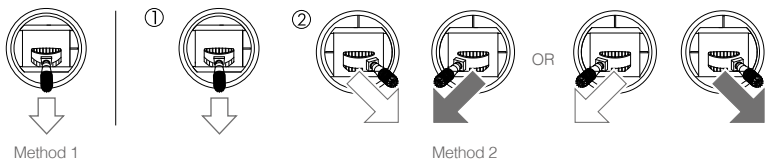

Stopping the Motors Mid-flight

Push the left stick to the bottom inside corner and press the RTH button at the same time. Only stop the motors mid-flight in emergency situations when doing so can reduce the risk of damage or injury.

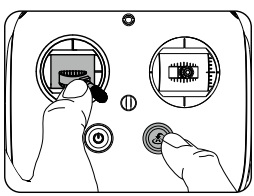

Flight Test

Takeoff / Landing Procedures

1. Place the aircraft on an open, flat area on the ground with the rear of the aircraft facing you.
2. Power on the remote controller and your mobile device, and then one of the Intelligent Flight Batteries.
3. Launch the DJI GO app and enter Camera View.
4. Wait until the Aircraft Status Indicator blinks green. This means the Home Point is recorded and it is safe to fly. If it blinks yellow, the Home Point has not been recorded and you should not take off.
5. Push the throttle stick up slowly to take off or use Auto Takeoff.
6. To land, hover over a level surface, toggle the landing gear control switch to lower the landing gear, and then gently pull down on the throttle stick to descend slowly.
7. After landing, execute the CSC command or push the throttle stick down for 3 seconds until the motors come to a stop.
8. Turn off one of the Intelligent Flight Batteries and then the remote controller.

⚠
- When the Aircraft Status Indicator blinks yellow rapidly during flight, the aircraft has entered the Failsafe mode.
- The Aircraft Status Indicator will blink red slowly for a Low Battery Level warning, and blink red rapidly for a Critically Low Battery Level warning during flight.

© 2017 DJI All Rights Reserved.

Appendix

Specifications

Aircraft	
Structure	
Diagonal Wheelbase	1133 mm
Dimensions	1668 mm × 1518 mm × 727 mm with propellers, frame arms and GPS mount unfolded (including landing gear) 437 mm × 402 mm × 553 mm with propellers, frame arms and GPS mount folded (excluding landing gear)
Package Dimensions	520 mm × 480 mm × 640 mm (L × W × H)
Intelligent Flight Battery Quantity	6
Weight (with six TB47S batteries)	9.5 kg
Weight (with six TB48S batteries)	10 kg
Max Takeoff Weight	15.5 kg
Performance	
Hovering Accuracy (P-mode with GPS)	Vertical: ±0.5 m, Horizontal: ±1.5 m
Max Angular Velocity	Pitch: 300°/s, Yaw: 150°/s
Max Pitch Angle	25°
Max Speed of Ascent	5 m/s
Max Speed of Descent	3 m/s
Max Wind Resistance	8 m/s
Max Service Ceiling Above Sea Level	2500 m
Max Speed	40 mph / 65 kph (no wind)
Hovering Time* (with six TB47S batteries)	No payload: 32 min, 6 kg payload: 16 min
Hovering Time* (with six TB48S batteries)	No payload: 38 min, 5.5 kg payload: 18 min
Propulsion System	
Motor Model	DJI 6010
Propeller Model	DJI 2170R
Flight Control System	
Model	A3 Pro
Other	
Supported DJI Gimbals	Ronin-MX; Zenmuse Z30, Zenmuse X5/X5R, Zenmuse X3, Zenmuse XT; Zenmuse Z15 Series HD Gimbal: Z15-A7, Z15-BMPCC, Z15-5D III, Z15-GH4
Retractable Landing Gear	Standard
Operating Temperature	14° to 104° F (-10° to 40° C)

* The hovering time is based on flying at 10m above sea level in a no-wind environment and landing with 10% battery level.

 © 2017 DJI All Rights Reserved.

Remote Controller	
Operating Frequency	920.6 MHz to 928 MHz (Japan) 5.725 GHz to 5.825 GHz 2.400 GHz to 2.483 GHz
Max Transmitting Distance (unobstructed, free of interference)	FCC: 5 km CE: 3.5 km
EIRP	10 dBm @ 900 M 13 dBm @ 5.8 G 20 dBm @ 2.4 G
Video Output Port	HDMI, SDI, USB
Dual Users Capability	Master-and-Slave control
Mobile Device Holder	Supports smartphones and tablets
Output Power	9 W
Operating Temperature	14° to 104° F (-10° to 40° C)
Storage Temperature	Less than 3 months: -4° to 113° F (-20° to 45° C) More than 3 months: 72° to 82° F (22° to 28° C)
Charging Temperature	41° to 104° F (5° to 40° C)
Battery	6000 mAh LiPo 2S
Max Tablet Width	170 mm
Charger	
Model	MC6S600
Voltage Output	26.1 V
Rated Power	600 W
Single Battery Port Output Power	100 W
Battery (Standard)	
Model	TB47S
Capacity	4500 mAh
Voltage	22.2 V
Type	LiPo 6S
Energy	99.9 Wh
Net Weight	595 g
Operating Temperature	14° to 104° F (-10° to 40° C)
Storage Temperature	Less than 3 months: -4° to 113° F (-20° to 45° C) More than 3 months: 72° to 82° F (22° to 28° C)
Charging Temperature	41° to 104° F (5° to 40° C)
Max Charging Power	180 W

© 2017 DJI All Rights Reserved.

Battery (Optional)	
Model	TB48S
Capacity	5700 mAh
Voltage	22.8 V
Type	LiPo 6S
Energy	129.96 Wh
Net Weight	680 g
Operating Temperature	14° to 104° F (-10° to 40° C)
Storage Temperature	Less than 3 months: -4° to 113° F (-20° to 45° C) More than 3 months: 72° to 82° F (22° to 28° C)
Charging Temperature	41° to 104° F (5° to 40° C)
Max Charging Power	180 W

 © 2017 DJI All Rights Reserved.

Intelligent Flight Modes

Intelligent Flight Modes allow users to lock the orientation of the aircraft in different fashions or to pre-plan flight paths. Intelligent Flight Modes only work in F-mode, and users must toggle the flight mode switch to F-mode to activate Intelligent Flight Modes.

Point of Interest (POI)	Record a point of interest (POI). The aircraft's nose always points towards the POI.
Waypoints	Record a flight path, and the aircraft will fly along the same path repeatedly while you control the orientation. The flight path can be saved and re-used in the future.
Course Lock (CL)	Lock the current nose direction as the aircraft's forward direction. The aircraft will move in the locked direction regardless of its orientation (yaw angle).
Home Lock (HL)	Record a Home Point, and push the Pitch stick up/down to control the distance of the aircraft from the Home Point.

Prerequisites of Intelligent Flight Modes

Use them under the following conditions:

Intelligent Flight Modes	GPS Enabled	GPS	Flight Distance Limits
POI	Yes		Aircraft ←5m~500m→ POI
Waypoints	Yes		Aircraft ←< 500m→ Waypoint Waypoint ←>5m→ Waypoint Whole path length<5000m
CL	No	None	None
HL	Yes		Aircraft ←≥5m→ Home Point

Enabling Intelligent Flight Modes

Go to the DJI GO app > Camera View > > Multiple Flight Modes. On the remote controller, toggle the Flight Mode Switch to F-mode. Tap in the DJI GO app to use Intelligent Flight Modes by following the steps in the app.

© 2017 DJI All Rights Reserved.

Upgrading the Firmware

Upgrading the Aircraft and Lightbridge 2 Air System Firmware

Connect the aircraft to the DJI Assistant 2 to upgrade the aircraft's and Lightbridge 2 Air System's firmware. Refer to DJI Assistant 2 (p. 30) for details.

Upgrading the Remote Controller Firmware

The System Status bar in Camera View of the DJI GO app will flash several times if a firmware upgrade is available. Follow these steps to upgrade the firmware via the DJI GO app.

1. Go to the DJI GO app > Camera View > System Status bar > Overall Status. Tap Download Firmware to download and upgrade the firmware.
2. A progress bar in the DJI GO app will indicate the upgrade status. The Status LED on the remote controller will be solid blue while the upgrade is in progress and it will turn solid green when the upgrade is successful. The LED will turn solid red if the upgrade fails. Restart the remote controller and try again.

- DO NOT perform the firmware upgrade while the aircraft is flying in the air. Only carry out the firmware upgrade when the aircraft is on the ground.
- Both the Lightbridge 2 Air System and the remote controller firmware must be up-to-date, or else they will not link.
- Check in the DJI GO app that you have the latest firmware installed before each flight.
- The firmware upgrade requires an internet connection. Connect your mobile device to a Wi-Fi network whenever possible.
- DO NOT power off the remote controller during the upgrade.
- The remote controller may become unlinked from the aircraft after the firmware upgrade. Relink the remote controller and aircraft if necessary.

Upgrading the Zenmuse Z30, X3, X5 Series and XT Firmware

If you are using a Zenmuse Z30, X3, X5 series or XT gimbal and camera, mount the gimbal and camera to the aircraft and follow the steps below to upgrade its firmware via a Micro SD card.

- Be sure to unplug the gimbal attitude cable before camera firmware update, or else firmware update will fail. Ensure that the aircraft is powered off before unplugging the cable.
- Ensure that there is only one version of update file in the Micro SD card, or else there will be an update error.

Step 1- Check the Battery Level and Micro SD Card Storage

a. Ensure that the Intelligent Flight Batteries have at least 50% power level. Power on one of the batteries and ensure that other batteries are triggered automatically. If not, find solutions in the DJI GO app.

b. Ensure that there is at least 100MB of free space on the Micro SD card.

Step 2- Prepare the Firmware Update Package

a. Download the firmware update package from the Matrice 600 Pro page on the DJI website. (http://www.dji.com/matrice600-pro/info#downloads)

 © 2017 DJI All Rights Reserved.

b. Insert the Micro SD card into your PC. Extract all the downloaded files into the root directory of the Micro SD card. While the Matrice 600 Pro is powered off, remove the Micro SD card from your PC and insert it into the Micro SD card slot on the gimbal.

Step 3- Upgrade the Firmware

a. Ensure the remote controller is powered off and then power on one of the Intelligent Flight Batteries. The firmware upgrade will begin automatically once all the Intelligent Flight Batteries are triggered.
b. It will take approximately 25 minutes to complete the firmware upgrade. The gimbal will repeat a beeping pattern of four fast beeps to indicate that the upgrade is in progress, and emit one slow beep followed by two fast beeps to indicate that the upgrade has been completed successfully.
c. Check the upgrade status by opening the .txt file that is automatically generated after the upgrade. You should see the text “result: successful” in the .txt file if the upgrade is successful. Otherwise, try upgrading the firmware again if you see the text “result: failed” in the text file or the gimbal sounds a long beeping sound.

Retractable Landing Gear

Recalibrating Servo Travel

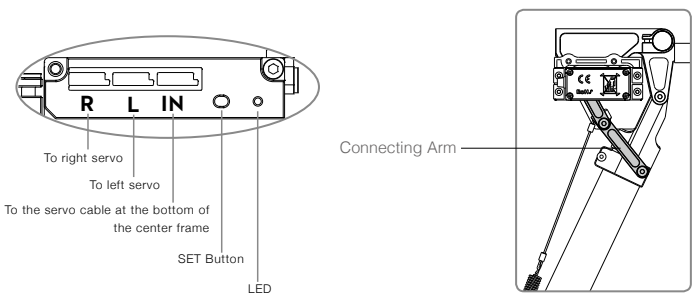

Keep your hands away from all moving parts to avoid injuries.

Instructions:

1. Be sure to remove the two springs on the landing gear, or else calibration may fail.
2. Ensure that the “R”, “L” and “IN” connections are correct.
3. Keep the whole aircraft off of the ground during calibration, as landing gear will move.
4. Use a pin to press and hold the SET button while powering on one of the Intelligent Flight Batteries, releasing the button when the battery powers on. The remaining batteries will power on automatically (if the remaining batteries do not automatically power on, connect your mobile device to the remote controller and follow the on-screen tips in the DJI GO app). The LED will blink yellow quickly. Press the SET button again. Auto calibration will begin and the LED will blink yellow slowly. DO NOT obstruct any moving parts during auto calibration.
5. During calibration, the left landing gear leg will raise and lower, followed by the right landing gear leg.
6. After calibration, both the left and right landing gear legs will be lowered and the LED will display a solid green light. This indicates that the landing gear is working properly.
7. Connect both springs to the legs and the center frame.

© 2017 DJI All Rights Reserved.

- If the LED is solid yellow after calibration, a problem has occurred. Ensure that the servos are mounted correctly and then try again.
- Avoid obstructions during calibration. If the landing gear was obstructed, recalibration will be required, per the above steps.
- If the “R” and “L” servo cables are reversed, travel will not be measured correctly. Fix the connections and recalibrate the landing gear using the above steps.
- Landing gear servo travel has been pre-calibrated. Mechanical adjustment of the servo travel is not recommended.

LED Description

G — Solid Green	System normal
G ····· Blinking Green Rapidly	Calibration required
G ····· Blinking Green Slowly	Recalibration required
Y — Solid Yellow	Calibration failed
Y ····· Blinking Yellow Rapidly	Enter calibration mode
Y ····· Blinking Yellow Slowly	System calibrating
R — Solid Red	Servo stalled
R ····· Blinking Red Rapidly	Unsafe startup alert
R ····· Blinking Red Slowly	Input signal abnormal

Specifications

Operating Voltage	6S LiPo	Input Signal	PWM (High-Pulse Width 800 - 2200us)
Operating Current	Max 1 A @ 6S LiPo	Output Signal	PWM (Mid Position is 1520us) in 90 Hz
Operating Temperature	-20° to 70° C	Output Voltage	6 V
Total Weight	742 g	Servo Travel	150° (Min 120°)

 © 2017 DJI All Rights Reserved.

Reserved Mounting Position Dimensions

A mounting position for your own devices is reserved at the bottom of the center frame.

1. Remove the twelve M3×6.5 screws at the bottom of the center frame first, and then remove the expansion mounting kit.

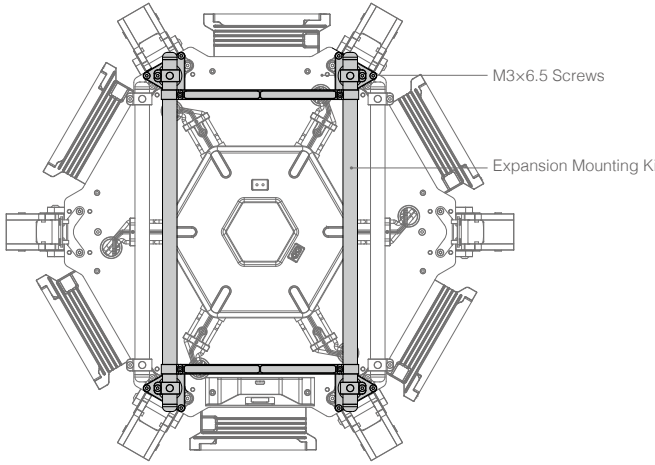

2. The dimensions of the reserved mounting position is shown as follows (unit: mm).

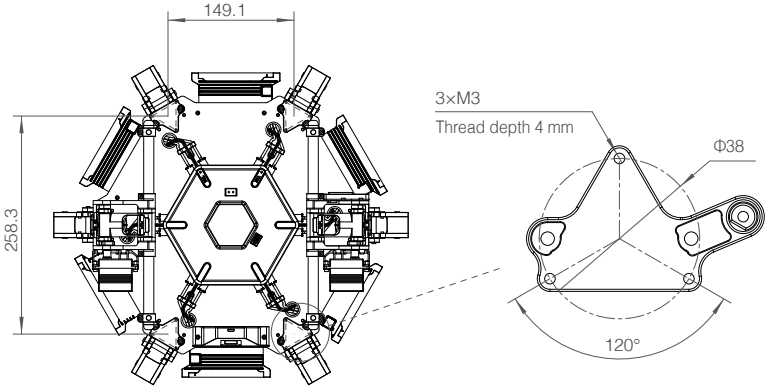

© 2017 DJI All Rights Reserved.

A3 Pro Flight Control System Overview

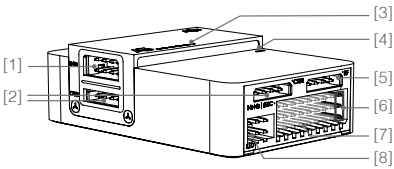

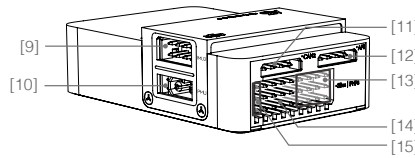

Flight Controller

[1] IMU1

Communicates with the IMU Pro module. Connected before delivery.

[2] CAN1

Dedicated DJI CAN-Bus port. Communicates with the GPS-Compass Pro module or other DJI devices (e.g. Real Time Kinematic (RTK) GPS system, gimbals).

[3] Orientation Arrow

Points to the front of the aircraft.

[4] Status Indicator

Indicates the status of the flight controller and triple modular redundancy system.

[5] RF Port

Communicates with the DJI Lightbridge 2 Air System. Connected to the Lightbridge 2 Air System upon delivery.

[6] iESC Port

Communicates with the DJI Smart ESC. Connected to the DJI Smart ESC upon delivery.

[7] M1-M8 Pins

Connects to the corresponding ESC PWM port for each motor. M1-M6 have been connected to the ESCs and M7 has been connected to the ground upon delivery. M8 is reserved.

[8] LED Port

Communicates with the LED module. Connected to the Aircraft Status Indicator upon delivery.

[9] IMU2 Port

Communicates with the IMU Pro module. Connected before delivery.

[10] PMU Port

Derives power from the PMU. Connected to the PMU upon delivery.

[11] CAN2

Communicates with an SDK device.

[12] API Port

Communicates with an SDK device.

[13] F5-F8 Pins

Multifunction PWM output ports.

[14] F1-F4 Pins

Multifunction PWM output ports. The fan control cable (1-pin) has been connected to the F1 pin and the landing gear servo cable has been connected to the F2 pin upon delivery.

[15] S-Bus Port

The fan power cable (2-pin) has been connected to the S-Bus port upon delivery.

 © 2017 DJI All Rights Reserved.

PMU Module

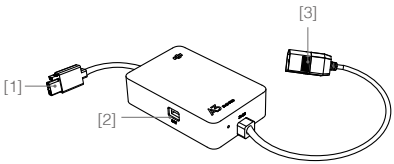

[1] Power Port (9V 3A)

Provides power to the flight controller. Connected before delivery.

[2] iBAT

Communicates with the DJI Intelligent Flight Battery. Connected to the battery management system before delivery.

[3] 3S-12S

Draws power from the DJI Intelligent Flight Battery or other LiPo battery. Connected to the battery management system before delivery.

GPS-Compass Pro Module

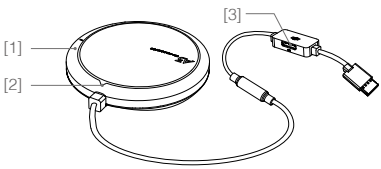

[1] Status Indicator

Indicates the status of the GPS-Compass Pro module and the triple modular redundancy system.

[2] Orientation Arrow

The GPS-Compass Pro module should be mounted with the arrow pointing toward the aircraft nose.

[3] Extended CAN1 Port

Dedicated DJI CAN-Bus port for connection to other DJI systems (e.g. Real Time Kinematic (RTK) GPS system).

IMU Pro Module

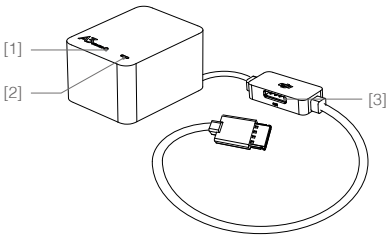

[1] Orientation Arrow

Arrow indicated direction of the IMU Pro module.

[2] Status Indicator

Indicates the status of the IMU Pro module and the triple modular redundancy system.

[3] CAN1 GPS Port

Communicates with the GPS-Compass Pro module. Connected to the GPS-Compass Pro before delivery.

© 2017 DJI All Rights Reserved.

Lightbridge 2 Air System Overview

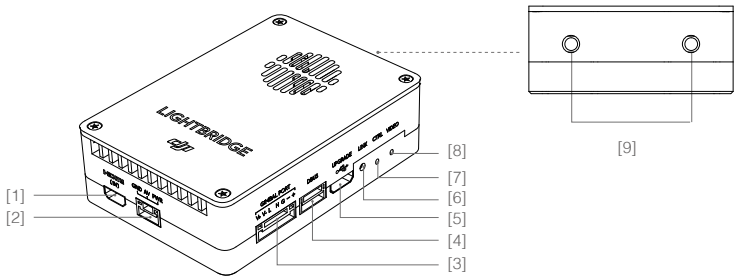

[1] HDMI IN

Supports up to 1080p60 input resolution. This port has been connected to an HDMI cable and the other end of the cable is an HDMI-D connector.

[2] AV IN

Receives AV input from the camera.

[3] Gimbal Port

Connects to a DJI gimbal or camera.

[4] DBUS Port

Sends the remote controller signal to the flight controller. Connected to the RF port on the flight controller upon delivery.

[5] Upgrade Port

Connected to the USB Hub built into the center frame upon delivery.

[6] Link Button

Used to link the Air System with the remote controller.

[7] Control Indicator

Indicates the status of the Air System and remote controller.

[8] Video Indicator

Indicates the video transmission status.

[9] Antenna Port

This port has been connected to an antenna extension cable upon delivery.

 © 2017 DJI All Rights Reserved.

DJI Gimbal Connection Illustrator

Ronin-MX

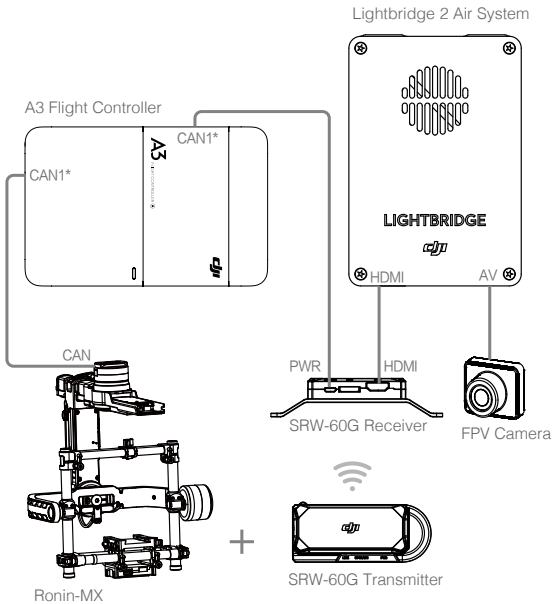

When using the Ronin-MX, set the App Output Mode in the DJI GO app to display the image on your mobile device from the camera used with the Ronin-MX. Launch the DJI GO app > Camera View > HD.ıll > Disable EXT Port, adjust the Bandwidth Allocation to ensure that the “HDMI” percentage is more than 0%, and then set the App Output Mode to HDMI.

Zenmuse Z30

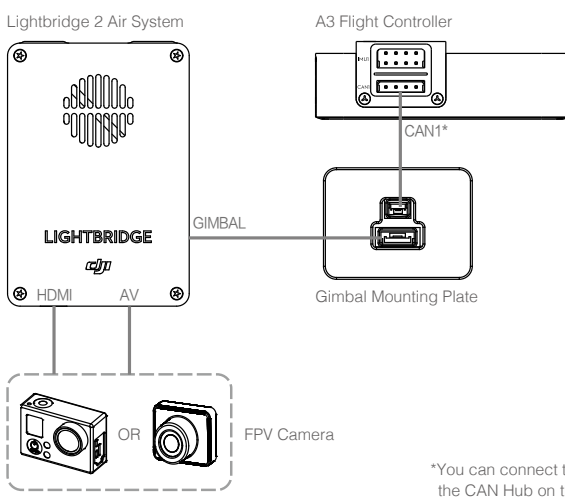

*You can connect the CAN cable to the CAN Hub on the GPS cable.

© 2017 DJI All Rights Reserved.

Zenmuse X3, X5 Series and XT

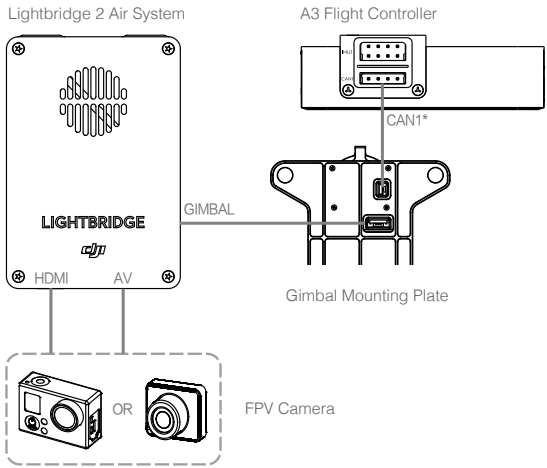

Zenmuse Z15 Series HD Gimbal

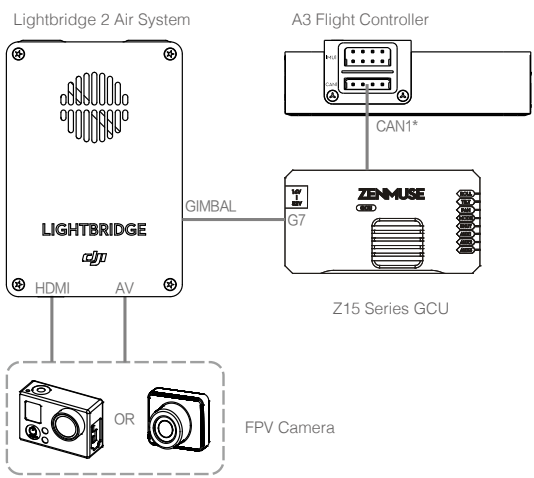

*You can connect the CAN cable to the CAN Hub on the GPS cable.

When using the Zenmuse Z30, X3, X5 Series, XT or Z15 series HD gimbal, set the App Output Mode in the DJI GO app to display the image on your mobile device from the camera used with your gimbal. Launch the DJI GO app > Camera View > HD > Enable EXT Port, adjust the Bandwidth Allocation to ensure that the “EXT” percentage is more than 0%, and then set the App Output Mode to EXT.

 © 2017 DJI All Rights Reserved.

DJI Zenmuse X3 Gimbal and Camera

Camera

Camera Profile

The X3 gimbal and camera can record up to 4K 4096×2160p video at 24 fps, and capture 12-megapixel images. It features a 1/2.3" Sony EXMOR CMOS image sensor. Preview of the camera's POV in the DJI GO app before shooting images and video. Have extra options to shoot stills in burst mode or self-timer mode, and export video in either MOV or MP4 format.

Camera Micro SD Card Slot

To store your photos and videos, plug in the Micro SD card into the Micro SD card slot on the gimbal before powering on the Matrice 600 Pro. The camera supports a single Micro SD card of up to 64GB. A UHS-1 type Micro SD card is recommended because of its fast read and write capability, allowing you to store high-resolution video files.

⊘ DO NOT remove the Micro SD card from the gimbal when it is powered on.

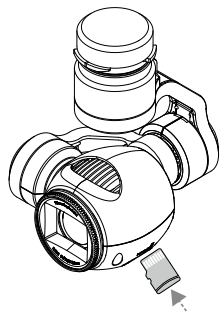

Camera Data Port

Power on the Matrice 600 Pro and then connect a USB cable to the Camera Data Port to download photos or videos from the camera to your PC.

⚠ Power on the aircraft before downloading the files.

Camera Operation

Use the Shutter and Record button on the remote controller to shoot images or the videos through the DJI GO app. For more information on how to use these buttons, refer to Controlling the Camera (p. 17).

ND Filter

Attach an ND filter to the front of the camera to reduce over exposure and the 'jello' effect.

© 2017 DJI All Rights Reserved.

Gimbal

Gimbal Profile

The 3-axis gimbal provides a steady platform for the camera, allowing you to capture stable video and images. The gimbal can tilt the camera up to 120 degrees and rotate 320 degrees.

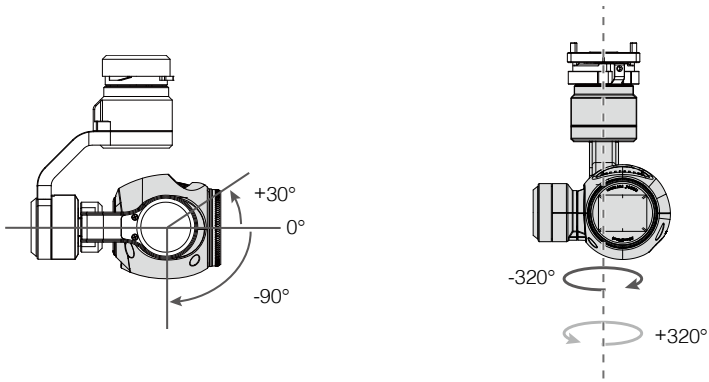

Under the default settings, turn the gimbal dial on the remote controller to tilt the camera. Note that you cannot simultaneously tilt and pan the camera in the Single Remote Controller mode. Enable the Master-and-Slave mode in the DJI GO app and set a second remote controller to Slave if you wish to tilt and pan the camera together.

Gimbal Dial Settings

Follow the instructions below to use the gimbal dial to tilt/pan the camera:

1. Power on the aircraft and the remote controller.
2. Go to the DJI GO app > Camera View > > Remote Controller Settings.
3. Set the customizable button C1 or C2 as the Gimbal Pitch/Yaw.

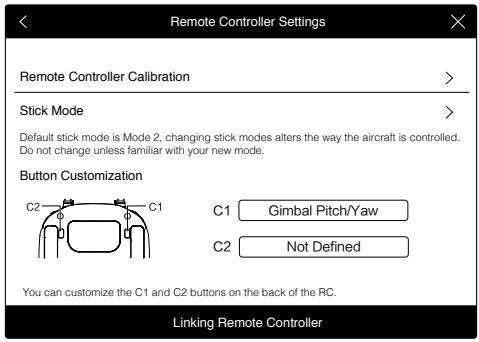

 © 2017 DJI All Rights Reserved.

Press the C1 or C2 button to switch between pitch mode and yaw mode. Use the gimbal dial to control the tilt/pan motion of the camera.

Using the DJI GO App to Control the Gimbal

Follow the steps below to use the DJI GO app to control the gimbal's pitch/yaw motion:

1. Go to the DJI GO app > Camera View.
2. Tap and hold on the screen until a blue circle appears.
3. Move your finger to control the gimbal's pitch/yaw motion.

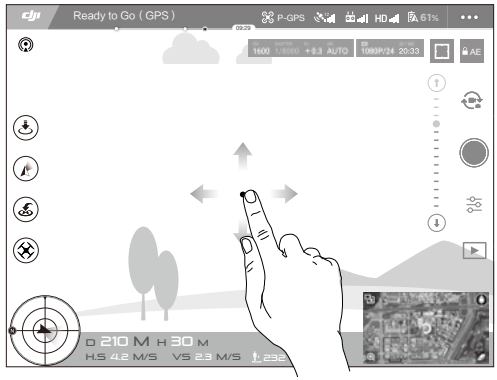

Gimbal Operation Modes

Switch between the three operation modes in Camera View in the DJI GO app. Note that your mobile device must be connected to the remote controller for changes to take effect. Refer to the table below for details:

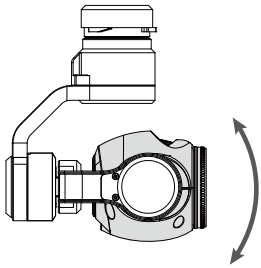

Pitch

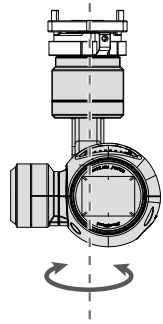

Yaw

© 2017 DJI All Rights Reserved.

	Follow Mode	The gimbal's orientation is aligned with the aircraft's nose. One user alone can control the pitch motion of the gimbal, but a second operator is required to control the yaw motion using a second remote controller.
	FPV Mode	The gimbal will lock to the movement of the aircraft to provide a First-Person-View flying experience.
	Free Mode	The gimbal's motion is independent of the aircraft's orientation. One user alone can control the pitch motion of the gimbal, but a second user is required to control the yaw motion using a second remote controller.
	Re-alignment	Re-align the yaw angle of the gimbal with that of the aircraft. The pitch angle remains unchanged during the re-alignment.
	• A gimbal motor error may occur if the gimbal is placed on an uneven ground because of impact with ground objects. Be sure to take off from a flat, open ground to protect the gimbal from impact. • Flying in heavy fog or inside clouds may make the gimbal wet, leading to a temporary failure. The gimbal will recover when it dries out.	

Specifications

Gimbal	
Model	Zenmuse X3
Power Output (Camera Attached)	Static: 9 W; In Motion: 11 W
Operating Current	Static: 750 mA; In Motion: 900 mA
Angular Vibration	±0.03°
Mounting	Detachable
Controllable Range	Pitch: -90° to +30°; Yaw: ±320°
Mechanical Range	Pitch: -125° to +45°; Yaw: ±330°
Controllable Speed	Pitch: 120°/s; Yaw: 180°/s
Camera	
Name	X3
Model	FC350
Total Pixels	12.76 M
Effective Pixels	12.4 M
Max Image Size	4000 x 3000
ISO	100-3200 (Video); 100-1600 (Photo)
Shutter	8 to 1/8000 s
FOV (Field Of View)	94°

 © 2017 DJI All Rights Reserved.

CMOS	Sony EXMOR 1/2.3”
Lens	20 mm (35 mm format equivalent), f/2.8, focus at ∞ 9 elements in 9 groups Anti-distortion
Still Photography Modes	Single shot Burst mode: 3/5/7 frames Auto Exposure Bracketing (AEB): 3/5 frames at ±0.7EV Timed shot
Video Recording Modes	UHD (4K): 4096x2160p 24/25, 3840x2160p 24/25/30 FHD: 1920x1080p 24/25/30/48/50/60 HD: 1280x720p 24/25/30/48/50/60
Video Storage Bitrate	60 Mbps
Supported File Formats	FAT32/exFAT Image: JPEG, DNG Video: MP4/MOV (MPEG-4 AVC/H.264)
Supported SD Cards	Micro SD Max capacity: 64 GB; Class 10 or UHS-1 rating required
Operating Temperature	-10° to 40 °C

DJI incorporates HDMI™ technology.
The terms HDMI and HDMI High-Definition Multimedia Interface, and the HDMI Logo are trademarks or registered trademarks of HDMI Licensing LLC in the United States and other countries.

This content is subject to change.

Download the latest version from
http://www.dji.com/matrice600-pro

If you have any questions about this document, please contact DJI by sending a message to **DocSupport@dji.com**.

MATRICE is a trademark of DJI. Copyright © 2017 DJI All Rights Reserved.